LINEAR MOTION SYSTEM

SHANDONG JINGRUI TRANSMISSION TECHNOLOGY CO.,LTD.

Shandong Jingrui Transmission Technology Co.,Ltd.

Address: Room 106, No.7 Shuanghe Street, Wenchang sub-district office,

Changqing district, Jinan city, Shandong province,China.

Email: sales@sdjrcd.com

Tel:+86 531 88699270

Website: www.peklinearmotion.com

PEK®

SHANDONG JINGRUI TRANSMISSION TECHNOLOGY CO., LTD.

is one professional manufacturer of linear motion systems and automation components with modernized workshop and the manufacture equipment. The factory covers 15000 square meters and located in Changqing district, Jinan city, Shandong provide which is often referred to as the "Spring City" for its well-known 72 artesian springs inside urban area.

It mainly produces a wide range of linear guide rail, ball screws&end supports, support rail units, shaft support&slide shafts, rack and pinion, cross roller bearings,linear shaft optical axis and ball slide linear bearings. The linear rail can be in standard lengths or cut to any desired requirement as part of a complete assembly.

Our professional technical team can offer one-stop solution for any linear motion control application. It doesn't matter if you are a one time user or a large volume OEM, we can assist you in your advantage and selecting the most cost effective solution to successfully complete your Automation Tasks!



TARGETED MARKET

We are always with full enthusiasm and sincere attitude of cooperation and the win-win business philosophy, and to fulfill our responsibility as a machine component manufacturer to supply our customers with high-quality products and customized services.











CONTENTS

- Linear Guide P01–P18
- Precision Ball Screw P19–P25
- Ball Screw Support Unit P26–P31
- Rack and Pinion P32–P38

APPLICATION



Aerospace



Railway



Wind Energy



Medical Device



Paper Industry



Lifting Equipment



Metallurgy Industry



Mining Industry



Industrial Robot

LINEAR GUIDE



Ball Caged Linear Guide



Roller Caged Linear Guide

Types of Linear Guide

Guides with plain motion

Plain bearings are the simplest type of linear guides, with their straightforward construction and easy installation process. There are several types, including box way and dovetail, both of which can carry high loads.

Guides with rolling motion

Rolling linear guides incorporate balls or rollers between two bearing surfaces. They can be recirculating or non–recirculating: recirculating designs have ongoing motion along the rail and so can continue to roll for an infinite distance, while non–recirculating designs are limited by the length of the bearing.

Performance Advantages of Linear Motion System:

- Simple Installation, easy maintenance.
- Low Noise– Smooth, quiet, high speed operation.
- Self–Aligning
- Interchangeable between rail and carriages without compromising system accuracy.
- Design flexibility with multiple carriage styles, sizes, preload and accuracy. Multiple rail accuracy and rail mounting options.

Product Structure

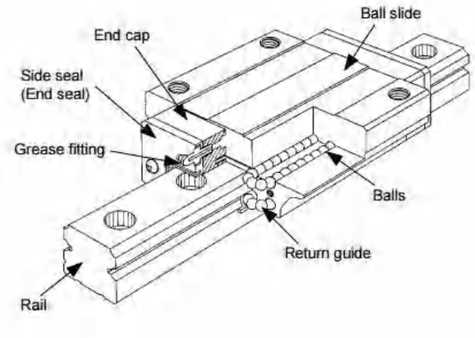

Linear Guide Model Code

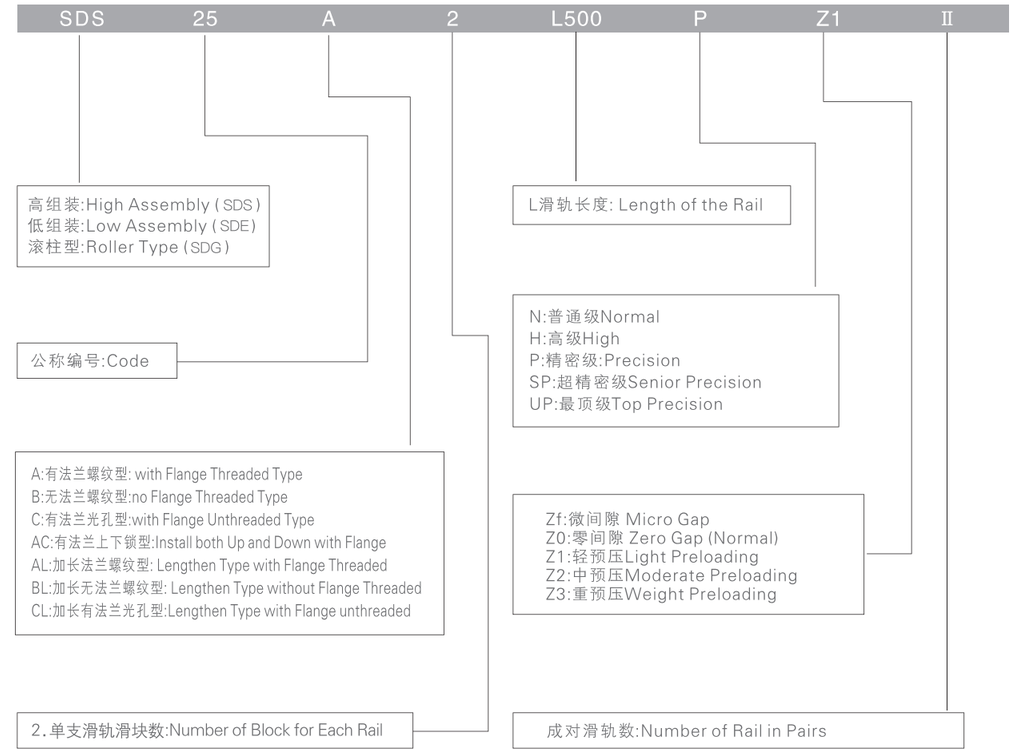

Linear Guide Precision Selection

Five accuracy grades for choose:Normal/High/Precision/Senior Precision/Top Precision.

SDS linear guides' accuracy is mainly reflected on three aspects: accuracy of running parallelism, accuracy of assembly size, accuracy of the position error of hight and width in pairs(when several blocks used on one rail or several rails install on one plane, the positionerror of height and width in pairs is prescriptive)

Accuracy Grades of Linear Guide and Their Application for Reference.

Machine	Accuracy Class				
	N	H	P	SP	UP
机械加工中心 Machining Center			○	○	
车床 Turning Lathe			○	○	
铣床 Milling Machine			○	○	
镗床 Boring Machine			○	○	○
座标镗床 Jig–Boring Machine				○	○
磨床 Grinding Machine			○	○	○
放电加工机 Electrical Discharge Machine		○	○		
衡压机 Pressing Machine		○	○		
镭射加工机 Laser Processing Machine	○	○	○		
木工机 Woodworking Machine	○	○	○		
Nc钻床 NC Drilling Machine		○	○		
攻牙中心 Tapping Center		○	○		
集装箱交换装置 Container Switching Device	○				
ATC	○				
线切割机 Wire Electrical Discharge Machining		○	○		
砂轮修整装置 Wheel Dressing Device			○	○	

Machine Type	Accuracy Class				
	N	H	P	SP	UP
直交座标型 Orthogonal Coordinate	○	○			
圆柱座标型 Cylindrical Coordinate	○	○			
线接合器 Line Adapter		○	○		
探测器 Detector			○	○	
电子部件插入机 Electronic Component Insertion Machines	○	○			
印刷电路板开孔机 Printed Circuit Board Tapping Machine	○	○	○		
射出成型机 Injection Moulding Machine	○	○			
三次元测定机 Three Dimensional Measuring Instrument			○	○	
办公机器 Office Machine	○	○			
搬运机器 Transmission Machine	○	○			
Xy工作台 XY Work Table	○	○	○		
涂装机 Coating Machine	○	○			
焊接机 Welding Machine	○	○			
医疗机器 Medical Machine	○	○			
Digitizer	○	○	○		
检查装置 Checking Device		○	○	○	

Linear Guide Precision Specification

Geometric tolerance and accuracy of SDS series linear guide show as table 1 in page A05 and table 2 in page A06. The accuracy of each model is divided into: Normal,High,Precision,Senior Precision, Top Precision.

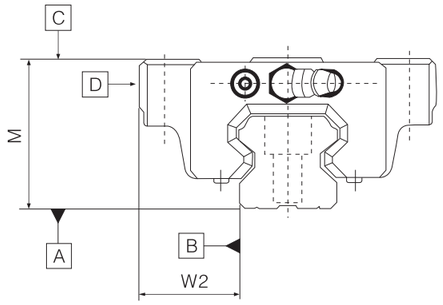

SDS series Linear Guide Dimension and Accuracy Inspection Item

Unit: mm

Nominal Model	Accuracy Specification	Normal	High	Precision	Senior Precision	Top Precision
		N	H	P	SP	UP
SDS15 SDS20	高度M的尺寸容许误差 allowable error of height size M	±0.1	±0.03	0 −0.03	0 −0.015	0 −0.008
	高度M的成对相互差 allowable mutual error of height size M in pairs	0.02	0.01	0.006	0.004	0.003
	宽度W2的尺寸容许误差 allowable error of width size W2	±0.1	±0.03	0 −0.03	0 −0.015	0 −0.008
	宽度W2的成对相互差 allowable mutual error of width size W2 in pairs	0.02	0.01	0.006	0.004	0.003
SDS25 SDS30 SDS35	高度M的尺寸容许误差 allowable error of height size M	±0.1	±0.04	0 −0.04	0 −0.02	0 −0.01
	高度M的成对相互差 allowable mutual error of height size M in pairs	0.02	0.015	0.007	0.005	0.003
	宽度W2的尺寸容许误差 allowable error of width size W2	±0.1	±0.04	0 −0.04	0 −0.02	0 −0.01
	宽度W2的成对相互差 allowable mutual error of width size W2 in pairs	0.03	0.015	0.007	0.005	0.003
SDS45 SDS55	高度M的尺寸容许误差 allowable error of height size M	0.1	±0.05	0 −0.05	0 −0.03	0 −0.02
	高度M的成对相互差 allowable mutual error of height size M in pairs	0.03	0.015	0.007	0.005	0.003
	宽度W2的尺寸容许误差 allowable error of width size W2	±0.1	±0.05	0 −0.05	0 −0.03	0 −0.02
	宽度W2的成对相互差 allowable mutual error of width size W2 in pairs	0.03	0.02	0.01	0.007	0.005
SDS65 SDS85	高度M的尺寸容许误差 allowable error of height size M	±0.08	±0.04	0 −0.05	0 −0.04	0 −0.03
	高度M的成对相互差 allowable mutual error of height size M in pairs	0.03	0.02	0.01	0.007	0.005
	宽度W2的尺寸容许误差 allowable error of width size W2	±0.08	±0.04	0 −0.05	0 −0.04	0 −0.03
	宽度W2的成对相互差 allowable mutual error of width size W2 in pairs	0.03	0.02	0.01	0.007	0.005

Linear Guide Precision Specification

(表2) Table 2

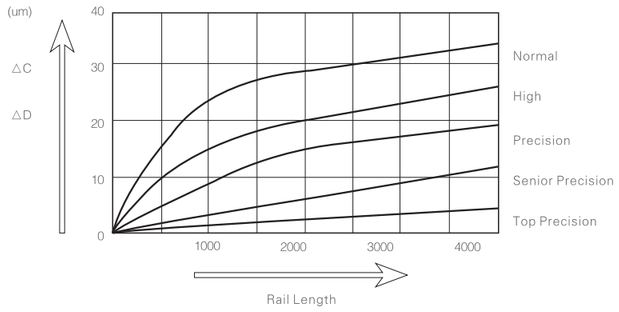

导轨长度（mm） Rail Length（mm）		行走平行度值（μm） Running Paralleism Value（μm）				
含以上 Above	以下 Below	N	H	P	SP	UP
-	50	5	3	2	1.5	1
50	80	5	3	2	1.5	1
80	125	5	3	2	1.5	1
125	200	5	3.5	2	1.5	1
200	250	6	4	2.5	1.5	1
250	315	7	4.5	3	1.5	1
315	400	8	5	3.5	2	1.5
400	500	9	6	4.5	2.5	1.5
500	630	11	7	5	3	2
630	800	12	8.5	6	3.5	2
800	1000	13	9	6.5	4	2.5
1000	1250	15	11	7.5	4.5	3
1250	1600	16	12	8	5	4
1600	2000	18	13	8.5	5.5	4.5
2000	2500	20	14	9.5	6	5
2500	3150	21	16	11	6.5	5.5
3150	4000	23	17	12	7.5	6

SDS series Linear Guide Allowable Statical Torque Specification

型号 Model / 方向 Direction	MA(KN.m)		MB(KN.m)		MC(KN.m)
	1个 1 Block	2个靠紧 2 Close bocks	1个 1 Block	2个靠紧 2 Close bocks	1个 1 Block
SDS15	0.07	0.37	0.07	0.37	0.10
SDS20	0.16	0.82	0.16	0.82	0.23
SDS20L	0.27	1.4	0.27	1.4	0.31
SDS25	0.27	1.4	0.27	1.4	0.4
SDS25L	0.46	2.4	0.46	2.4	0.51
SDS30	0.43	2.3	0.43	2.3	0.65
SDS30L	0.73	3.7	0.73	3.7	0.86
SDS35	0.64	3.4	0.64	3.4	1.0
SDS35L	1.1	5.6	1.1	5.6	1.4
SDS45	1.3	6.9	1.3	6.9	2.1
SDS45L	2.1	10.9	2.1	10.9	2.8
SDS55	2.2	11.7	2.2	11.7	3.6
SDS55L	3.7	18.8	3.7	18.8	4.8
SDS65	4.2	21.0	4.2	21.0	6.6
SDS65L	7.2	35.8	7.2	35.8	8.9
SDS85	10.2	56.5	10.2	56.5	12.6
SDS85L	12.4	63.5	12.4	63.5	16.7

Linear Guide Installation Accuracy

The allowable error of linear guide installation

SDS series linear blocks has the ability of automatic self–aligning. According to the different linear guide preload level, If it can meet the tolerance of the following table， even if the mounting surface has a little error ， it also can get the smoothly linear motion.

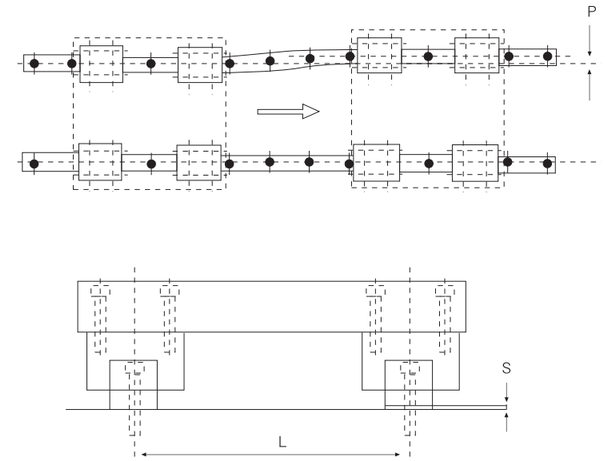

二轴左右平行度误差容许值
Allowable error of parallelism of right and left　Unit：μm

预压 等级 Pre–load / SDS	中预压 Moderate Preloading	轻预压 Light preload	普通 Normal
	Z0	Z1	无记号 N/M
15	–	18	25
20	18	20	25
25	20	22	30
30	27	30	40
35	30	35	50
45	35	40	60
55	45	50	70
65	55	60	80
85	70	75	90

二轴上下水平高度误差容许值
Allowable error of horizontal height of up and down　Unit：μm

预压 等级 Pre–load / SDS	中预压 Moderate Preloading	轻预压 Light preload	普通 Normal
	Z0	Z1	无记号 N/M
15	–	85	130
20	50	85	130
25	70	85	130
30	90	110	170
35	120	150	210
45	140	170	250
55	170	210	300
65	200	250	350
85	240	290	400

注：轴间距离500mm时容许值与L成正比
Note: when the distance of two rails is 500mm, the error allowable value is proportional to L

Structure of Connective Datum of Linear Guide

Structure of Connective Datum of Linear Guide

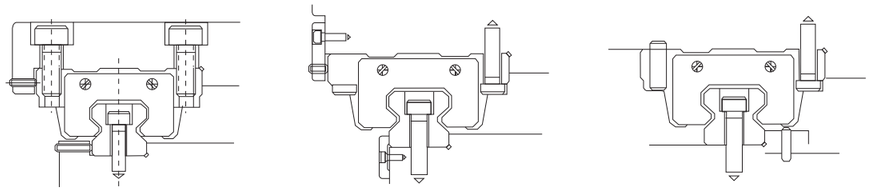

（图一）
（Picture 1）

1.在同一平面安装两根导轨时，如所受的负载为冲击载荷且精度要求高，两根导轨侧面都应有定位面，滑块侧面也应设置定位面，如图一所示

When install two rails on one surface, both of the rails and blocks should have the locating surface if the load type is impact load and requirement of the precision is high, as that shows in picture 1

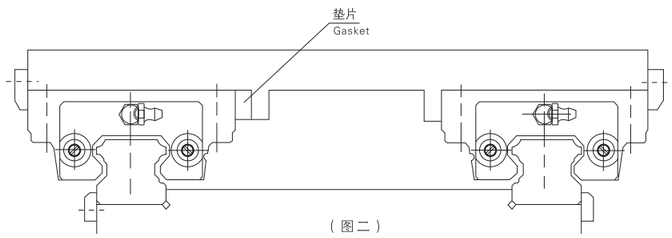

（图二）
（Picture 2）

2.图三，图四所示为最常用的安装方式
Picture 3 and picture 4 is the normal installation method

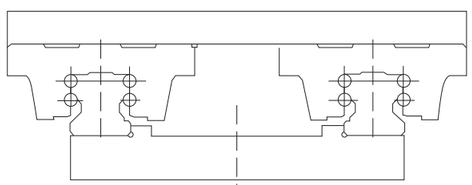

（图三）
（Picture 3）

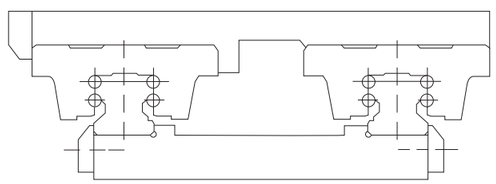

（图四）
（Picture 4）

Height and Chamfering of Installation Platform

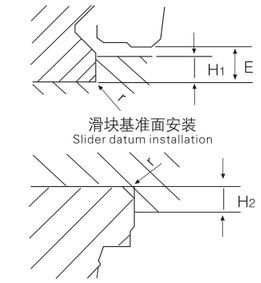

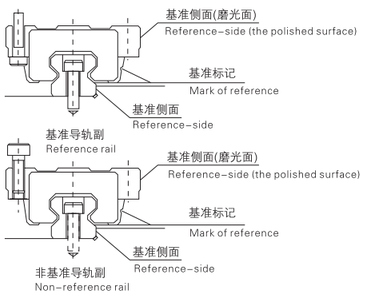

将滑块和导轨安装在床身和工作台时，为使滑块和导轨不与基础发生干涉，按表-10中的R值加工成清角槽。

First,when install the block and rail to lathe or work table, it shouldundercut a groove to avoid the block and rail interfere with the referencesurface (table-10).

其次认清导轨副安装时所需的基准侧面。

Second, know clearly about the reference-side when installation.

规格 Model	倒角(r) Chamfer(r)	基面肩高(H1) platform height(H1)	基面肩高(H2) platform height(H2)	E
SDS 15	≤0.3	3.5	4	4.5
SDS 20	≤0.5	4	4.5	5
SDS 25	≤0.5	5	6	6.5
SDS 30	≤0.5	6	6	7
SDS 35	≤0.5	7	6	10
SDS 45	≤0.7	8	8	11
SDS 55	≤0.7	11	8	13
SDS 65	≤1.0	12	10	14
SDS 85	≤1.0	13	12	16

Installation and Adjustment of Linear Guide

1、安装与使用
Installation and Use

请小心轻拿轻放，避免磕碰以影响导轨副的直线精度。不允许将滑块拆离导轨或超过行程又推回去。若因安装困难，需要拆下滑块，可向我公司订购引导轨。（引导轨是一种装配辅助工具，其实际尺寸比导轨小一号。需要时，可将导轨与引导轨的端头对接，把滑块从导轨推到引导轨上，当导轨安装好后，再将滑块从引导轨推到导轨上，注意基准方向）。

Please handling the products gently to avoid to influence of the precision of the linear guide. The block is not allowed to detach the rail or or push back to the rail when it is over stroke. If the block need to dismantle from the rail because of the difficulty assembly, you can order the fake rail from us.(fake rail is a auxiliary tools which has a smaller size than the guide rail. When dismantle the block, firstly joint the end of fake rail and guide rail, then push the block from the guide rail to fake rail. When the guide rail is assembly, push the block from the fake rail back to the guide rail, pay attention of the reference direction when do these steps)

2、安装注意事项
Install Caution

首首先正确区分基准导轨副与非基准导轨副（基准导轨上有HD的标记，滑块上有磨光的基准侧面）（见图）

When install the products distinguish the reference guide rail and non-reference guide rail clearly(the reference guide rail has the reference mark and the block has a reference-side polished surface

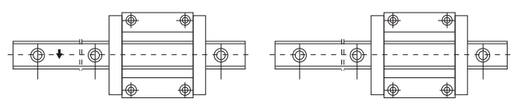

基准导轨副
Reference Guide Rail

非基准导轨副
Non-reference Guide Rail

SDS series Linear Guide Specification (High Assembly)



● SDS–B type SDS–BL Type

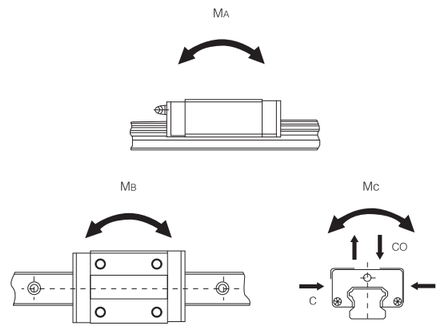

Note: Specification of MA,MB,MC refer to page P05

● SDS–B Type SDS–BL Type

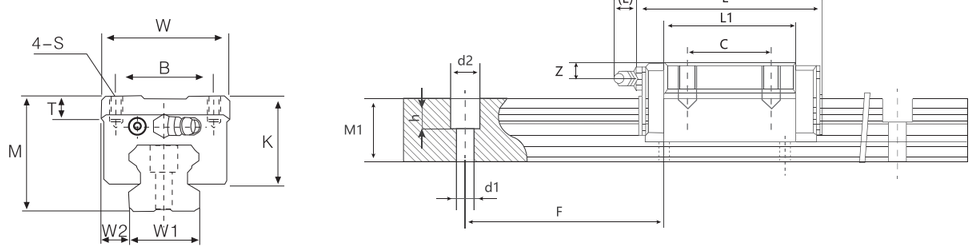

Model	Physical Dimension			Block Dimension								Grease Nipple Specification
	Height M	Width W	Length L	B	C	S	L1	T	K	N	E	
SDS15B	28	34	61.8	26	26	M4x0.7x5	39.8	6	23.8	8.3	5.5	G-M4
SDS20B	30	44	77.4	32	36	M5x0.8x6	50.8	8	25.2	5	12	G-M6
SDS20BL	30	44	93.4	32	50	M5x0.8x6	66.8	8	25.2	5	12	G-M6
SDS25B	40	48	83.5	35	35	M6x8	59.5	10	33.25	10	12	G-M6
SDS25BL	40	48	102.6	35	50	M6x8	78.6	10	33.25	10	12	G-M6
SDS30B	45	60	100.5	40	40	M8x10	70.5	12	37.25	10	12	G-M6
SDS30BL	45	60	123	40	60	M8x10	93	12	37.25	10	12	G-M6
SDS35B	55	70	113.9	50	50	M8x12	80.5	12	45.8	15	12	G-M6
SDS35BL	55	70	139.2	50	72	M8x12	105.8	12	45.8	15	12	G-M6
SDS45B	70	86	138.5	60	60	M10x17	97.7	15	60.9	20	16	G-PT1/8
SDS45BL	70	86	171.2	60	80	M10x17	128.8	15	60.9	20	16	G-PT1/8
SDS55B	80	100	163	75	75	M12x18	118	18	67	21	16	G-PT1/8
SDS55BL	80	100	201	75	95	M12x18	156.1	18	67	21	16	G-PT1/8
SDS65B	90	126	186	76	70	M16x20	147	23	76	19	16	G-PT1/8
SDS65BL	90	126	246	76	120	M16x20	206.5	23	76	19	16	G-PT1/8
SDS85B	110	156	247	100	80	M18x25	178.6	30	94	23	16	G-PT1/8
SDS85BL	110	156	303	100	140	M18x25	236	30	94	23	16	G-PT1/8

Model	Rail Dimension					Basic Load Rating		Weight	
	Width W1	W2	HeightM1	Length of pitch F	d1 × d2 × h	C (KN)	Co (KN)	Block(kg)	Rail(kg/m)
SDS15B	15	9.5	15	60	4.5x7.5x5.3	8.33	13.5	0.2	1.5
SDS20B	20	12	18	60	6x9.5x8.5	13.8	23.8	0.34	2.3
SDS20BL	20	12	18	60	6x9.5x8.5	21.3	31.8	0.43	2.3
SDS25B	23	12.5	22	60	7x11x9	19.9	34.4	0.56	3.3
SDS25BL	23	12.5	22	60	7x11x9	27.2	45.9	0.73	3.3
SDS30B	28	16	26	80	9x14x12	28	46.8	0.91	4.8
SDS30BL	28	16	26	80	9x14x12	37.3	62.5	1.18	4.8
SDS35B	34	18	29	80	9x14x12	37.3	61.1	1.54	6.6
SDS35BL	34	18	29	80	9x14x12	50.2	81.5	1.99	6.6
SDS45B	45	20.5	38	105	14x20x17	60	95.6	2.92	11
SDS45BL	45	20.5	38	105	14x20x17	80.4	127	3.1	11
SDS55B	53	23.5	44	120	16x23x20	88.5	137	4.3	15.1
SDS55BL	53	23.5	44	120	16x23x20	119	183	5.4	15.1
SDS65B	63	31.5	53	150	18x26x22	141	215	7.3	22.5
SDS65BL	63	31.5	53	150	18x26x22	192	286	9.3	22.5
SDS85B	85	35.5	65	180	24x35x28	210	310	13	35.2
SDS85BL	85	35.5	65	180	24x35x28	282	412	16	35.2

● SDS–B Type

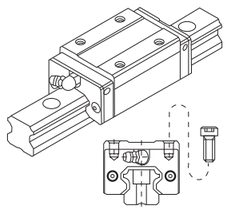

SDS-B型缩小了滑块的宽度此型号最适用于紧凑结构设计
SDS-B Type Block reduce the width of the block which is suitable for the compact structure.

● SDS–BL Type

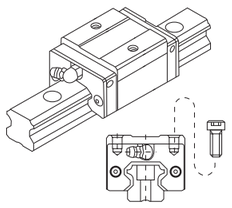

具有与SDS- B相同的横截面形状，加长了滑块的全长，提升了额定负荷能力
Same cross section to SDS-B, lengthened the block' s length, enhance the rated load capacity.

SDS series Linear Guide Specification (High Assembly)



● SDS–C type SDS–ACL type SDS–AC type

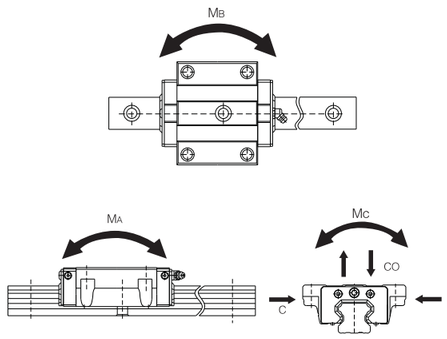

Note: Specification of MA,MB,MC refer to page P05

● SDS–C type SDS–ACL type SDS–AC type

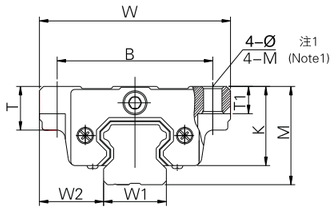

● SDS–C type

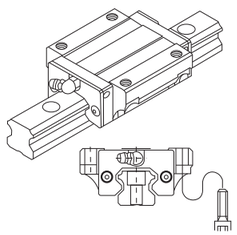

在滑块的法兰部加工了通孔安装孔，可在螺栓无法从上面贯穿工作台的情况下使用
With the unthreaded installation hole, can install from the bottom of the block when bolt can’t run through the operating platform from the above

● SDS–ACL type

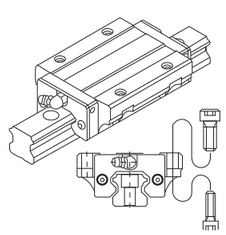

具有与SDS–AC相同的横截面形状，加长了滑块的全长，提升了额定负荷能力，并可以双向安装螺栓
Same cross section to SDS–AC, lengthened the block’s length, enhance the rated load capacity, and can install from the both side of block

● SDS–AC type

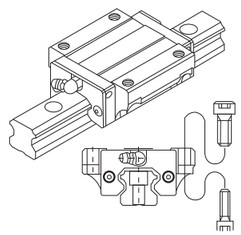

SDS–C是光孔型螺栓可以从下往上安装；SDS–AC可以双向安装螺栓
SDS–C can install from the bottom to the top and the flange hole has no thread; SDS–AC can install bidirectionally

型号 Model	外形尺寸 Physical Dimension			滑块尺寸 Block Dimension										油嘴规格 Grease Nipple Specification
	高度M Height M	宽度W Width W	长度L Length L	B	C	Ø	M	L1	T	T1	K	N	E	
SDS15C/ SDS15AC	24	47	61.8	38	30	4.5	M5	39.8	8.5	7	19.8	4.3	5.5	G–M4
SDS20C/ SDS20AC	30	63	77.4	53	40	6	M6	50.8	10	10	25.2	5	12	G–M6
SDS20ACL	30	63	93.4	53	40	6	M6	66.8	10	10	25.2	5	12	G–M6
SDS25C/ SDS25AC	36	70	83.5	57	45	7	M8	59.5	16	10	29.25	6	12	G–M6
SDS25ACL	36	70	102.6	57	45	7	M8	78.6	16	10	29.25	6	12	G–M6
SDS30C/ SDS30AC	42	90	100.5	72	52	9	M10	70.5	18	10	34.25	7	12	G–M6
SDS30ACL	42	90	123	72	52	9	M10	93	18	10	34.25	7	12	G–M6
SDS35C/ SDS35AC	48	100	113.9	82	62	9	M10	80.5	20	13	38.8	8	12	G–M6
SDS35ACL	48	100	139.2	82	62	9	M10	105.8	20	13	38.8	8	12	G–M6
SDS45C/ SDS45AC	60	120	138.5	100	80	11	M12	97.7	22	15	50.9	10	16	G–PT1/8
SDS45ACL	60	120	171	100	80	11	M12	129.8	22	15	50.9	10	16	G–PT1/8
SDS55C/ SDS55AC	70	140	163	116	95	14	M14	118	29	17	57	11	16	G–PT1/8
SDS55ACL	70	140	201	116	95	14	M14	156.1	29	17	57	11	16	G–PT1/8
SDS65C/ SDS65AC	90	170	186	142	110	16	M16	147	37	23	76	19	16	G–PT1/8
SDS65ACL	90	170	246	142	110	16	M16	206.5	37	23	76	19	16	G–PT1/8
SDS85C/ SDS85AC	110	215	247	185	140	18	M20	178.6	55	30	94	23	16	G–PT1/8
SDS85ACL	110	215	303	185	140	18	M20	236	55	30	94	23	16	G–PT1/8

型号 Model	导轨尺寸 Rail Dimension					基本额定负荷 Basic Load Rating		重量 Weight	
	宽度W1 Width W1	W2	高度M1 HeightM1	节距F Length of pitch F	d1×d2×h	C (KN)	Co (KN)	滑块(kg) Block(kg)	导轨(kg/m) Rail(kg/m)
SDS15C/ SDS15AC	15	16	15	60	4.5×7.5×5.3	8.33	13.5	0.19	1.5
SDS20C/ SDS20AC	20	21.5	18	60	6×9.5×8.5	13.8	23.8	0.42	2.3
SDS20ACL	20	21.5	18	60	6×9.5×8.5	21.3	31.8	0.53	2.3
SDS25C/ SDS25AC	23	23.5	22	60	7×11×9	19.9	34.4	0.64	3.3
SDS25ACL	23	23.5	22	60	7×11×9	27.2	45.9	0.83	3.3
SDS30C/ SDS30AC	28	31	26	80	9×14×12	28	46.8	1.11	4.8
SDS30ACL	28	31	26	80	9×14×12	37.3	62.5	1.46	4.8
SDS35C/ SDS35AC	34	33	29	80	9×14×12	37.3	61.1	1.62	6.6
SDS35ACL	34	33	29	80	9×14×12	50.2	81.5	2.08	6.6
SDS45C/ SDS45AC	45	37.5	38	105	14×20×17	60	95.6	2.88	11
SDS45ACL	45	37.5	38	105	14×20×17	80.4	127	3.3	11
SDS55C/ SDS55AC	53	43.5	44	120	16×23×20	88.5	137	4.5	15.1
SDS55ACL	53	43.5	44	120	16×23×20	119	183	5.7	15.1
SDS65C/ SDS65AC	63	53.5	53	150	18×26×22	141	215	8.5	22.5
SDS65ACL	63	53.5	53	150	18×26×22	192	286	10.7	22.5
SDS85C/ SDS85AC	85	65	65	180	24×35×28	210	310	17.0	35.2
SDS85ACL	85	65	65	180	24×35×28	282	412	23.0	35.2

注：SDS–C为法兰光孔型，孔径为Φ值，SDS–AC/SDS–ACL 为法兰螺纹型，其特点是螺栓可双向安装，
Note: SDS–C means block with flange unthreaded type, the diameter of thread hole reference to Φ .SDS–AC/SDS–ACL means block with flange threaded type, the bolt can istall from both sides of block, the size of thread hole reference to M.

SDE Series Linear Guide Specification (Low Assembly)



• SDE–B Type　SDE–BS Type

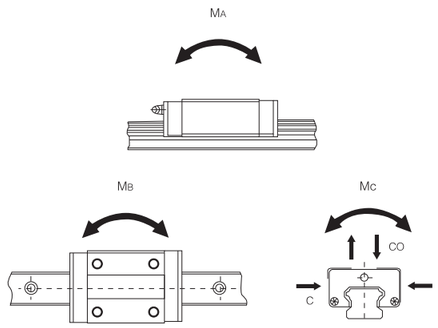

Note: Specification of MA,MB,MC refer to page P05

• SDE–B Type　SDE–BS Type

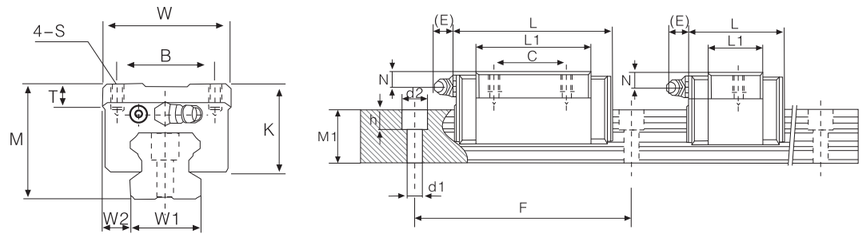

• SDE–B Type

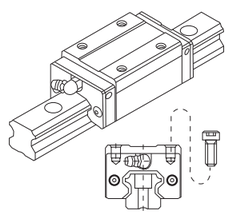

与SDE–B相比，SDE–B降低了组合高度，使用在高度有限制的特定条件下

Compared with SDE–B, SDE–B reduces the combined height, is used in the specific condition which has the height restriction.

• SDE–BS Type

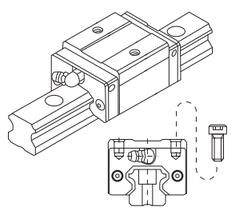

SDE–BS缩短了滑块的长度，在滑块长度和高度都有限制的情况下使用

SDE–BS reduce the length of the block can be used in the restriction of both height and length

型号 Model	外形尺寸 Physical Dimension			滑块尺寸 Block Dimension								油嘴规格 Grease Nipple Specification
	高度M Height M	宽度W Width W	长度L Length L	B	C	S	L1	T	K	N	E	
SDE15B	24	34	56.8	26	26	M4X6	39.8	6	19.7	4.3	5.5	G–M4
SDE15BS	24	34	40.1	26	–	M4X6	23.1	6	22.2	4.3	5.5	G–M4
SDE20B	28	42	70.1	32	32	M5X7	48.1	6	20	5	12	G–M6
SDE20BS	28	48	51	32	–	M5X7	29	6	23.5	5	12	G–M6
SDE25B	33	48	83	35	35	M6X9	59	8	26.55	5	12	G–M6
SDE25BS	33	48	59.5	35	–	M6X9	35.5	8	26	5	12	G–M6
SDE30B	42	60	98.1	40	40	M8X12	70.1	10	32	7	12	G–M6
SDE30BS	42	60	69.5	40	–	M8X12	41.5	10	32	7	12	G–M6
SDE35B	48	70	108	50	50	M8X12	78	12	37	8	12	G–M6
SDE35BS	48	70	75	50	–	M8X12	45	12	37	8	12	G–M6

型号 Model	导轨尺寸 Rail Dimension							重量 Weight	
	W1	W2	M1	F	di x d2 x h	C(KN)	Co(KN)	滑块(kg) Block(kg)	导轨(kg/m) Rail(kg/m)
SDE15B	15	9.5	12.5	60	4.5x7.5x5.3	7.83	16.19	0.15	1.25
SDE15BS	15	9.5	12.5	60	4.5x7.5x5.3	5.35	9.4	0.09	1.25
SDE20B	20	12	15.5	60	6x9.5x8.5	10.31	21.13	0.24	2.08
SDE20BS	20	12	15.5	60	6x9.5x8.5	7.23	12.74	0.15	2.08
SDE25B	23	12.5	18	60	7x11x9	10.27	32.4	0.41	2.67
SDE 25BS	23	12.	18	60	7x11x9	11.4	19.5	0.25	2.67
SDE30B	28	16	23	80	9x14x12	23.7	47.46	0.76	4.35
SDE30BS	28	16	23	80	9x14x12	16.42	28.1	0.45	4.35
SDE35B	34	18	27.5	80	9x14x12	33.35	64.84	1.13	6.14
SDE35BS	34	18	27.5	80	9x14x12	22.6	37.38	0.66	6.14

SDE Series Linear Guide Specification (Low Assembly)



• SDE–A Type SDE–AS Type

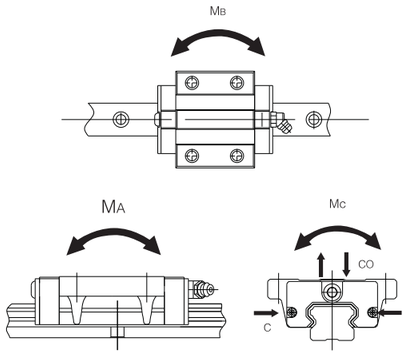

Note: Specification of MA,MB,MC refer to page P05

• SDE–A Type SDE–AS Type

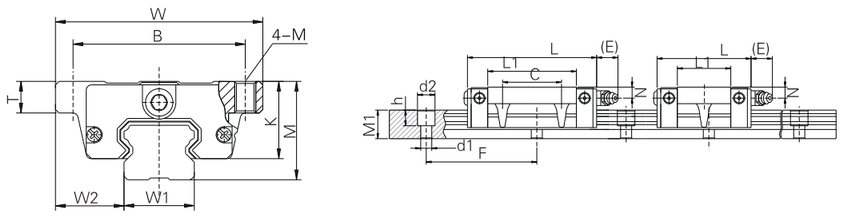

• SDE–A Type

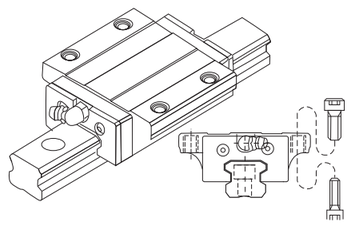

与SDE–A相比，SDE–A降低了组合高度，使用在高度有限制的特定条件下

Compared with SDE–A, SDE–A reduces the combined height, is used in the specific condition which has the height restriction.

• SDE–AS Type

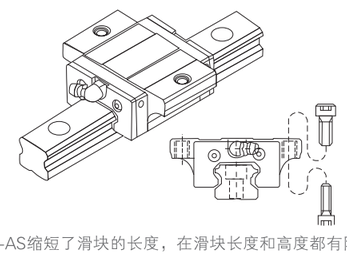

SDE–AS缩短了滑块的长度，在滑块长度和高度都有限制的情况下使用

SDE–AS reduce the length of the block can be used in the restriction of both height and length.

型号 Model	外形尺寸 Physical Dimension			滑块尺寸 Block Dimension								油嘴规格 Grease Nipple Specification
	高度M Height M	宽度W Width W	长度L Length L	B	C	M	L1	T	K	N	E	
SDE15A	24	52	56.8	41	26	M5	39.8	7.2	19.7	5.5	5.5	G–M4
SDE15AS	24	52	40.1	41	–	M5	23.1	7.2	19.7	5.5	5.5	G–M4
SDE20A	28	59	70.1	49	32	M6	48.1	9	22.2	6	12	G–M6
SDE20AS	28	59	51	49	–	M6	29	9	22.2	6	12	G–M6
SDE25A	33	73	83	60	35	M8	59	11	26.3	8	12	G–M6
SDE25AS	33	73	59.5	60	–	M8	35.5	11	26.3	8	12	G–M6
SDE30A	42	90	98.1	72	40	M10	70.1	11	32	8	12	G–M6
SDE30AS	42	90	69.5	72	–	M10	41.5	11	32	8	12	G–M6
SDE35A	48	100	108	82	50	M10	78	14	37	8.5	12	G–M6
SDE35AS	48	100	75	82	–	M10	45	14	37	8.5	12	G–M6

型号 Model	导轨尺寸 Rail Dimension					基本额定负荷 Basic load ratings		重量 Weight	
	宽度W1 Width W1	W2	高度M1 Width M1	节距F Pitch F	di x d2 x h	C(KN)	Co(KN)	滑块 (kg) Block(kg)	导轨 (kg/m) Rail(kg/m)
SDE15A	15	9.5	12.5	60	4.5x7.5x5.3	7.83	16.19	0.21	1.25
SDE15AS	15	9.5	12.5	60	4.5x7.5x5.3	5.35	9.4	0.12	1.25
SDE20A	20	12	15.5	60	6x9.5x8.5	10.31	21.13	0.32	2.08
SDE20AS	20	12	15.5	60	6x9.5x8.5	7.23	12.74	0.19	2.08
SDE25A	23	12.5	18	60	7x11x9	16.27	32.4	0.59	2.67
SDE25AS	23	12.	18	60	7x11x9	11.4	19.5	0.35	2.67
SDE30A	28	16	23	80	9x14x12	23.7	47.46	1.04	4.35
SDE30AS	28	16	23	80	9x14x12	16.42	28.1	0.62	4.35
SDE35A	34	18	27.5	80	9x14x12	33.35	64.84	1.45	6.14
SDE35AS	34	18	27.5	80	9x14x12	22.6	37.38	0.84	6.14

SDG Series Linear Guide Specification (Caged Roller)

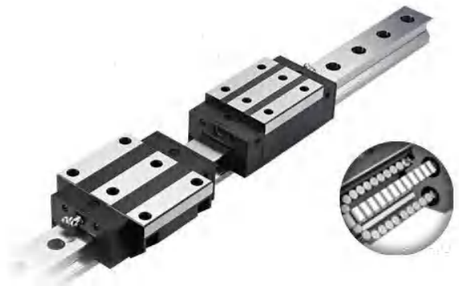

- SDG-B Type SDG-BL Type

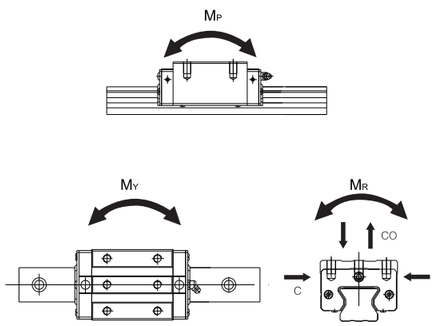

- SDG-B Type SDG-BL Type

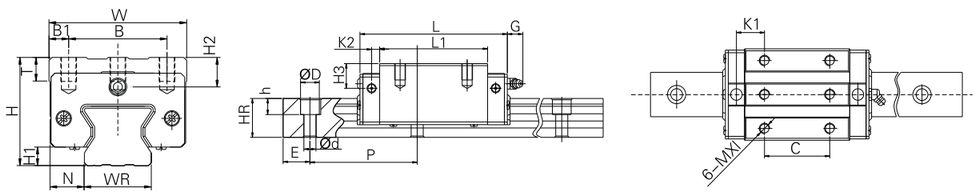

- SDG-B Type

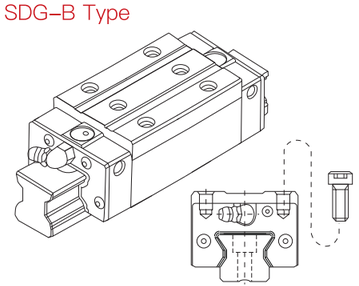

缩小滑块的宽度，可以从滑块的上面进行装配
Reduce the width of the block. It can be assembled from the top of the block.

- SDG-BL Type

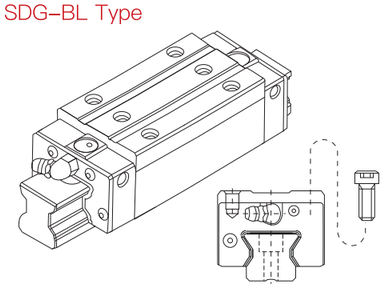

与SDG-B型具有相同的断面尺寸，增加了滑轨的长度，并增加了负荷滚柱数，提升整体的负荷能力
Same cross section to SDG-B, lengthened the block's length, increase the quantity of roller, enhance the rated load capacity

型号 Model	组件尺寸 Component Demension			滑块尺寸(MM) Slider Dimensions													油嘴规格 Grease Nipple Specification
	H	H1	N	W	B	B1	C	L1	L	K1	K2	G	MXL	T	H2	H3	
SDG20B	34	5	12	44	32	6	36	57.5	86	15.8	6	5.3	M5X8	8	8.3	8.3	G-M6
SDG20BL							50	77.5	106	18.8							
SDG25B	40	5.5	12.5	48	35	6.5	35	64.5	97.9	20.75	7.25	12	M6X8	9.5	10.2	10	G-M6
SDG25BL							50	81	114.4	21.5							
SDG30B	45	6	16	60	40	10	40	71	109.8	23.5	8	12	M8X10	9.5	9.5	10.3	G-M6
SDG30BL							60	93	131.8	24.5							
SDG35B	55	6.5	18	70	50	10	50	79	124	22.5	10	12	M8X12	12	16	19.6	G-M6
SDG35BL							72	106.5	151.5	25.5							
SDG45B	70	8	20.5	86	60	13	60	106	153.2	31	10	12.9	M10X17	16	20	24	G-PT1/8
SDG45BL							80	139.8	187	37.9							
SDG55B	80	10	23.5	100	75	12.5	75	125.5	183.7	37.75	12.5	12.9	M12X18	17.5	22	27.5	G-PT1/8
SDG55BL							95	173.8	232	51.9							
SDG65B	90	12	31.5	126	76	25	70	160	232	60.8	15.8	12.9	M16X20	25	15	15	G-PT1/8
SDG65BL							120	223	295	67.3							

型号 Model	导轨尺寸（mm） Rail Dimensions (mm)							导轨固定螺栓尺寸 Tightening Bolt of Rail	基本额定负荷 Basic Load Rating		容许静力矩 Allowable Static Torque			重量 Weight	
	WR	HR	D	h	d	P	E	(mm)	C(KN)	Co(KN)	MR KN-m	MP KN-m	MY KN-m	滑块(kg) Block(kg)	导轨(kg/m) Rail(kg/m)
SDG20B	20	21	9.5	8.5	6	30	20	M5X20	21.3	46.7	0.647	0.46	0.46	0.44	2.76
SDG20BL									26.9	63	0.872	0.837	0.837	0.62	
SDG25B	23	23.6	11	9	7	30	20	M6X20	27.7	57.1	0.758	0.605	0.605	0.67	3.08
SDG25BL									33.9	73.4	0.975	0.991	0.991	0.86	
SDG30B	28	28	14	12	9	40	20	M8X25	39.1	82.1	1.445	1.06	1.06	1.06	4.41
SDG30BL									48.1	105	1.846	1.712	1.712	1.42	
SDG35B	34	30.2	14	12	9	40	20	M8X25	57.9	105.2	2.17	1.44	1.44	1.61	6.06
SDG35BL									73.1	142	2.93	2.6	2.6	2.21	
SDG45B	45	38	20	17	14	52.5	22.5	M12X35	92.6	178.8	4.52	3.05	3.05	3.22	9.97
SDG45BL									116	230.9	6.33	5.47	5.47	4.41	
SDG55B	53	44	23	20	16	60	30	M14X45	130.5	252	8.01	5.4	5.4	5.18	13.98
SDG55BL									167.8	348	11.15	10.25	10.25	7.34	
SDG65B	63	53	26	22	18	75	35	M16X50	213	411.6	16.2	11.59	11.59	11.04	20.22
SDG65BL									275.3	572.7	22.55	22.17	22.17	15.75	

Precision Ball Screw

BALL SCREW

Ball screws,also known as recirculating ball spindles,consist of a ball screw shaft and ball screw nut within which the ball bearings are integrated and a ball return.

Ball screws are the most commonly used threaded spindles in industrial and precision machine tools,converting a rotary movement into a linear movement and vice versa .

Feature of ball screws and support units:



- Value and Performance

  Designed to deliver quality,durability and reliability at an affordable price.

- Large Stock and Fast Shipping

  12mm to 80mm screw diameters stocked. Lengths are cut in-house and typically shipped within 1-3days.

- Standard and Custom Options

  Multiple preload,accuracy,precision grades and screw diameters are available. Contact us for assistance in selection.

Ball Screw Nominal Code（滚珠丝杠公称代码）

SFU R 25 05 B2 D G C5 1000-- Po

(1)
(2)
(3)
(4)
(5)
(6)
(7)
(8)
(9)
(10)

(1). SFU: Nut codes

S :Single nut, D : Double nut , F: With flange, C:Without flange

T: T Type nut S: DIN nut, I: I type nut, V: V type nut , E: E type nut, K: K type nut, U: DIN nut

(2). Direction of nut

R: Right , L: Left

(3). 25: Shaft diameter (mm)

(4). 05: Lead(mm)

(5). B2: No.of Circuit(Circuit*Row)

(10). Flange type

N: not cutting , S: single cutting , D(U): Double cutting

(9). Produce code

G(P):Grinding, F(T): Rolled

(8). Accuracy Grade Code

C1,C2,C3,C5,C7,C10

(7). Full-length of shaft(mm)

(6). Axial Clearance Preload Grade

P0, P1,P2,P3,P4

SFU Ball Screw Specification

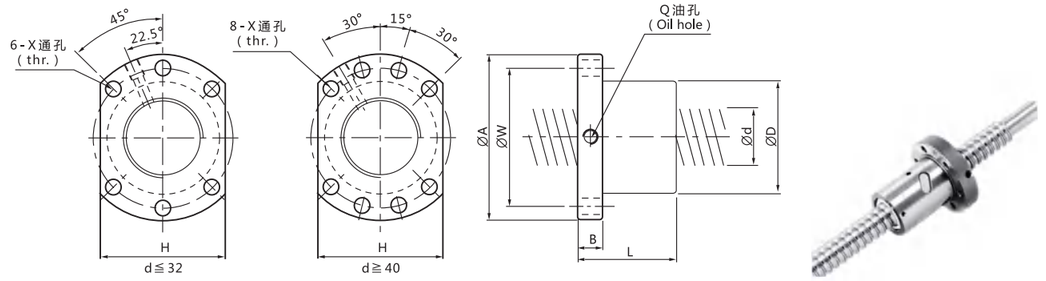

Unit： mm

I：导程 Lead Da：珠径 Ball Diameter n：珠圈数 Number of Circuits

Ca：动额定负荷 Basic Dynamic Rating Load(Kgf) Coa：静额定负荷 Basic Static Rating Load(Kgf)

	公称型号 Model No.	轴径 d	导程 I	珠径 Da	螺帽尺寸 Nut Size									动额定负荷 Ca	静额定负荷 Coa
					D	A	B	L	W	H	X	Q	n		
☆	SFUR1204-3	12	4	2.5	24	40	10	40	32	30	4.5	M6×1	1×3	451	709
	SFUR1604-3	16	4	2.381	28	48	10	36	38	40	5.5	M6×1	1×3	488	940
☆	SFUR1605-3		5	3.175	28	48	10	42	38	40	5.5	M6×1	1×3	666	1143
☆	SFUR1605-4		5	3.175	28	48	10	50	38	40	5.5	M6×1	1×4	888	1525
☆	SFUR1610-3		10	3.175	28	48	10	57	38	40	5.5	M6×1	1×3	716	1232
	SFUR2004-3	20	4	2.381	36	58	10	42	47	44	6.6	M6×1	1×3	741	1187
☆	SFUR2005-3		5	3.175	36	58	10	42	47	44	6.6	M6×1	1×3	749	1495
☆	SFUR2005-4		5	3.175	36	58	10	51	47	44	6.6	M6×1	1×4	999	1994
	SFUR2504-3	25	4	2.381	40	62	10	42	51	48	6.6	M6×1	1×3	605	1534
☆	SFUR2505-3		5	3.175	40	62	10	42	51	48	6.6	M6×1	1x3	839	1935
☆	SFUR2506-4		5	3.175	40	62	10	51	51	48	6.6	M6×1	1x4	1119	2581
☆	SFUR2510-3		10	4.762	40	62	10	70	51	48	6.6	M6×1	1x3	1427	2771
☆	SFUR2510-4		10	4.762	40	62	12	85	61	48	6.6	M6×1	1x4	1903	3695
☆	SFUR3205-4	32	5	3.175	50	80	12	52	65	62	9	M6×1	1x4	1264	3402
	SFUR3210-3		10	6.35	50	80	12	74	65	62	9	M6×1	1x3	2319	4575
	SFUR3210-4		10	6.35	50	80	12	90	65	62	9	M6×1	1x4	3092	6101
	SFUR4005-4	40	5	3.175	63	93	14	55	78	70	9	M8×1	1x4	1407	4341
	SFUR4010-3		10	6.35	63	93	14	71	78	70	9	M8×1	1x3	2610	5834
	SFUR4010-4		10	6.35	63	93	14	93	78	70	9	M8×1	1x4	3480	7779
	SFUR5010-4	50	10	6.35	75	110	16	93	93	85	11	M8×1	1x4	3898	10325
	SFUR6310-4	64	10	6.35	90	125	18	98	108	95	11	M8×1	1x4	4401	13611
	SFUR6320-4		20	9.525	95	135	20	149	115	100	13.5	M8×1	1x4	7404	19008
	SFUR8010-4	80	10	6.35	105	145	20	98	125	110	13.5	M8×1	1x4	4900	17366
	SFUR8020-4		20	9.525	125	165	25	154	145	130	13.5	M8×1	1x4	8403	25345

Note: With ☆☆ means that can produce left thread

DFU Ball Screw Specification

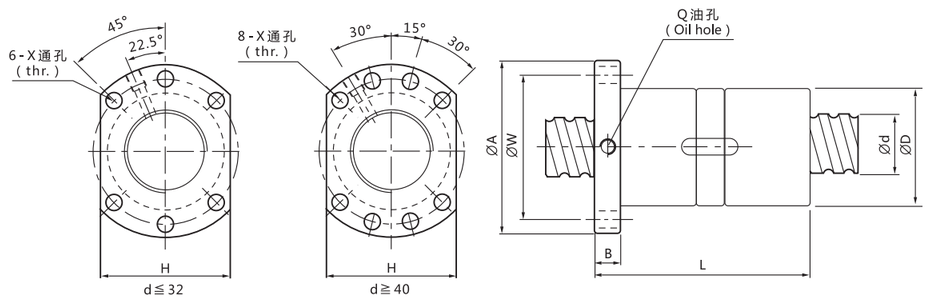

Unit： mm



I：导程 Lead Da：珠径 Ball Diameter n：珠圈数 Number of Circuits

Ca：动额定负荷 Basic Dynamic Rating Load(Kgf) Coa：静额定负荷 Basic Static Rating Load(Kgf)

	公称型号 Model No.	轴径 d	导程 I	珠径 Da	螺帽尺寸 Nut Size									动额定负荷 Ca	静额定负荷 Coa
					D	A	B	L	W	H	X	Q	n		
	DFUR1604-3	16	4	2.381	28	48	10	80	38	40	5.5	M6×1	1×3	488	940
☆	DFUR1605-4		5	3.175	28	48	10	100	38	40	5.5	M6×1	1×4	885	1525
☆	DFUR1610-3		10	3.175	28	48	10	118	38	40	5.5	M6×1	1×3	716	1232
	DFUR2004-3	20	4	2.381	36	58	10	80	47	44	6.6	M6×1	1×3	541	1187
☆	DFUR2005-4		5	3.175	36	58	10	101	47	44	6.6	M6×1	1×4	999	1994
	DFUR2504-3	25	4	2.381	40	62	10	80	51	48	6.6	M6×1	1×3	605	1534
☆	DFUR2505-4		5	3.175	40	62	10	101	51	48	6.6	M6×1	1x3	1119	2581
☆	DFUR2510-4		10	4.762	40	62	12	145	51	48	6.6	M6×1	1x4	1927	2771
☆	DFUR3205-4	32	5	3.175	50	80	12	102	65	62	9	M6×1	1x4	1264	3402
	DFUR3210-4		10	6.35	50	80	12	162	65	62	9	M6×1	1x4	3092	6101
	DFUR4005-4	40	5	3.175	63	93	14	105	78	70	9	M8×1	1x4	1407	4341
	DFUR4010-4		10	6.35	63	93	14	165	78	70	9	M8×1	1x4	3480	7979
	DFUR5010-4	50	10	6.35	75	110	16	171	93	85	11	M8×1	1x4	3898	10325
	DFUR6310-4	63	10	6.35	90	125	18	182	108	95	11	M8×1	1x4	4401	13611
	DFUR6320-4		20	9.525	95	135	20	290	115	100	13.5	M8×1	1x4	7404	19008
	DFUR8010-4	80	10	6.35	105	145	20	182	125	110	13.5	M8×1	1x4	4900	17366
	DFUR8020-4		20	9.525	125	165	25	295	145	130	13.5	M8×1	1x4	8403	25345

Note: With ☆☆ means that can produce left thread

SFI Ball Screw Specification

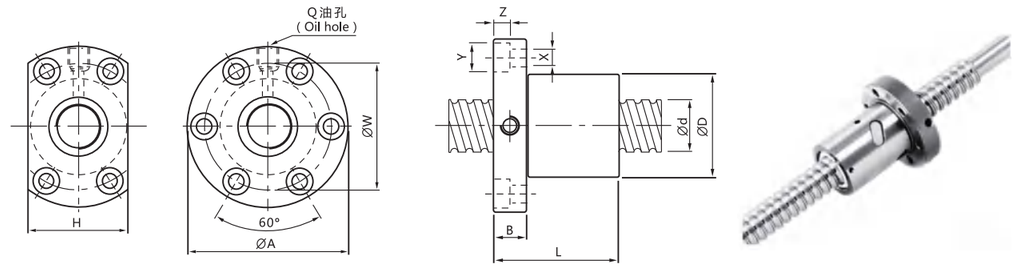

Unit： mm

I：导程 Lead Da：珠径 Ball Diameter n：珠圈数 Number of Circuits

Ca：动额定负荷 Basic Dynamic Rating Load(Kgf) Coa：静额定负荷 Basic Static Rating Load(Kgf)

	公称型号 Model No.	轴径 d	导程 I	珠径 Da	螺帽尺寸 Nut Size												动额定负荷 Ca	静额定负荷 Coa
					D	A	B	L	W	H	X	Y	Z	Q	n			
☆	SFIR1605-4	16	5	3.175	30	49	10	50	39	34	4.5	8	4.5	M6×1	4.5		888	1525
☆	SFIR1610-3		10	3.175	34	58	10	57	45	34	5.5	9.5	5.5	M6×1	5.5		716	1232
☆	SFIR2005-4	20	5	3.175	34	57	11	51	45	40	5.5	9.5	5.5	M6×1	5.5		999	1994
☆	SFIR2505-4	25	5	3.175	40	63	11	51	51	46	5.5	9.5	5.5	M8×1	5.5		1119	2581
☆	SFIR2510-4		10	4.762	46	72	12	85	58	52	6.5	11	6.5	M6×1	6.5		1903	3695
☆	SFIR3205-4	32	5	3.175	46	72	12	52	58	52	6.5	11	6.5	M8×1	6.5		1264	3402
	SFIR3210-4		10	6.35	54	88	15	90	70	62	9	14	8.5	M8×1	8.5		3092	6101
	SFIR4005-4	40	5	3.175	56	90	15	55	72	64	9	14	8.5	M8×1	8.5		1407	4341
	SFIR4010-4		10	6.35	62	104	18	93	82	70	11	17.5	11	M8×1	11		3480	7779
	SFIR5010-4	50	10	6.35	72	114	18	93	92	82	11	17.5	11	M8×1	11		3898	10325
	SFIR6310-4	63	10	6.35	85	131	22	98	107	95	14	20	13	M8×1	13		4401	13611
	SFIR8010-4	80	10	6.35	105	150	22	98	127	115	14	20	13	M8×1	13		4900	17366

Note: With ☆☆ means that can produce left thread

DFI Ball Screw Specification

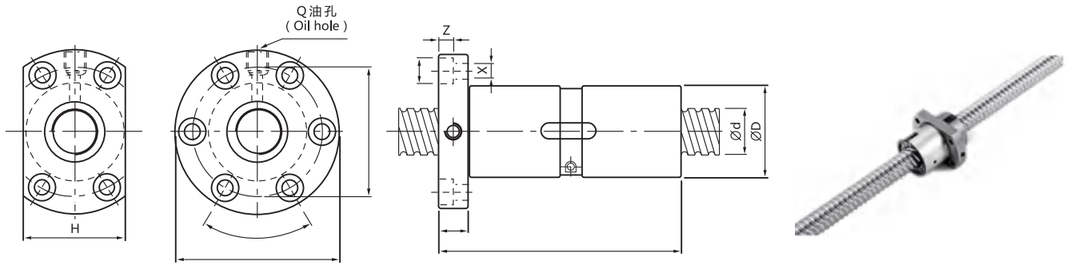

Unit： mm

I：导程 Lead Da：珠径 Ball Diameter n：珠圈数 Number of Circuits

Ca：动额定负荷 Basic Dynamic Rating Load(Kgf) Coa：静额定负荷 Basic Static Rating Load(Kgf)

	公称型号 Model No.	轴径 d	导程 I	珠径 Da	螺帽尺寸 Nut Size											动额定负荷 Ca	静额定负荷 Coa
					D	A	B	L	W	H	X	Y	Z	Q	n		
☆	DFIR1605-4	16	5	3.175	30	49	10	100	39	34	4.5	8	4.5	M6×1	1×4	888	1525
☆	DFIR2005-4	20	5	3.175	34	57	11	101	45	40	5.5	9.5	5.5	M6×1	1×4	999	1994
☆	DFIR2505-4	25	5	3.175	40	63	11	101	51	46	5.5	9.5	5.5	M8×1	1×4	1119	2581
☆	DFIR2510-4		10	4.762	46	72	12	145	58	52	6.5	11	6.5	M6×1	1×4	1903	3695
☆	DFIR3205-4	32	5	3.175	46	72	12	102	58	52	6.5	11	6.5	M8×1	1×4	1264	3402
	DFIR3210-4		10	6.35	54	88	15	162	70	62	9	14	8.5	M8×1	1×4	3092	6101
	DFIR4005-4	40	5	3.175	56	90	15	105	72	64	9	14	8.5	M8×1	1×4	1407	4341
	DFIR4010-4		10	6.35	62	104	18	165	82	70	11	17.5	11	M8×1	1×4	3480	7779
	DFIR5010-4	50	10	6.35	72	114	18	171	92	82	11	17.5	11	M8×1	1×4	3898	10325
	DFIR6310-4	63	10	6.35	85	131	22	182	107	95	14	20	14	M8×1	1×4	4401	13611
	DFIR8010-4	80	10	6.35	105	150	22	182	127	115	14	20	14	M8×1	1×4	4900	17366

Note: With ☆☆ means that can produce left thread

SFS Ball Screw Specification

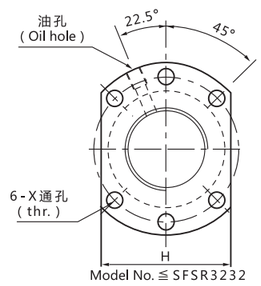

Model No. ≦ SFSR3232

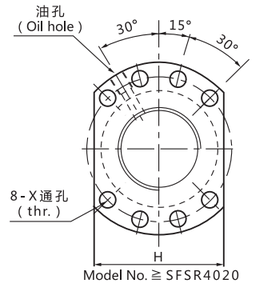

Model No. ≧ SFSR4020

Unit： mm

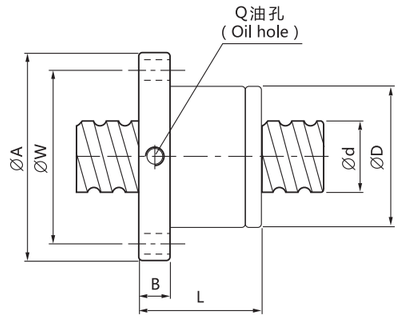



I：导程 Lead Da：珠径 Ball Diameter n：珠圈数 Number of Circuits

Ca：动额定负荷 Basic Dynamic Rating Load(Kgf) Coa：静额定负荷 Basic Static Rating Load(Kgf)

公称型号 Model No.	轴径 d	导程 I	珠径 Da	螺帽尺寸 Nut Size									动额定负荷 Ca	静额定负荷 Coa
				D	A	B	L	W	H	X	Q	n		
SFSR1210-2.8	12	10	2.5	24	40	10	48.5	32	30	4.5	M6×1	2.8×1	642	1287
SFSR1610-2.8	15	10	2.778	28	40	10	47	38	40	5.5	M6×1	2.8×1	839	1821
SFSR1616-1.8		16	2.778	28	40	10	45	38	40	5.5	M6×1	1.8×1	552	1137
SFSR2010-3.8	20	10	3.175	36	58	10	60	47	44	6.6	M6×1	3.8×1	1516	3833
SFSR2020-1.8		20	3.175	36	58	10	57	47	44	6.6	M6×1	1.8×1	764	1758
SFSR2510-3.8	25	10	3.175	40	62	12	62	51	48	6.6	M6×1	3.8×1	1638	4633
SFSR2520-2.8		20	3.969	40	62	12	72	51	48	6.6	M6×1	2.8×1	1206	2695
SFSR2525-1.8		25	3.175	40	62	12	70	51	48	6.6	M6×1	1.8×1	843	2199
SFSR3220-2.8	31	20	3.969	50	80	12	80	65	62	9	M6×1	2.8×1	1907	5482
SFSR3232-1.8		32	3.969	50	80	13	84	65	62	9	M6×1	1.8×1	1257	3426
SFSR4020-2.8	38	20	6.35	63	93	14	82	78	70	9	M8×1	2.8×1	3959	10715
SFSR4040-1.8		40	6.35	63	93	15	105	78	70	9	M8×1	1.8×1	2585	6648
SFSR5020-3.8	48	20	6.35	75	110	18	108	93	85	11	M8×1	3.8×1	5749	18485
SFSR5050-1.8		50	6.35	75	110	18	125	93	85	11	M8×1	1.8×1	2946	8749

SFY Ball Screw Specification

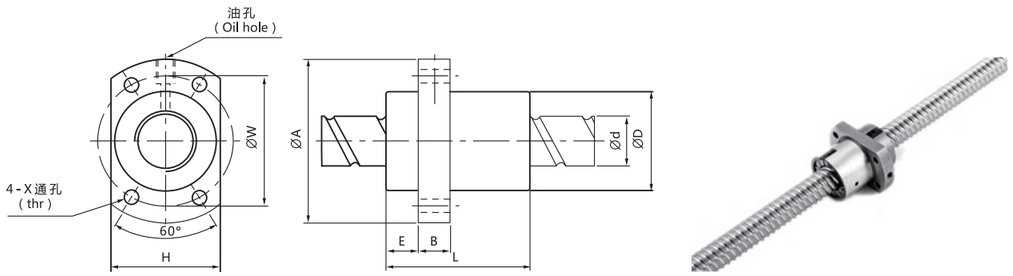

Unit：mm

I：导程 Lead Da：珠径 Ball Diameter n：珠圈数 Number of Circuits
Ca：动额定负荷 Basic Dynamic Rating Load(Kgf) Coa：静额定负荷 Basic Static Rating Load(Kg f)

公称型号 Model No.	轴径 d	导程 I	珠径 Da	螺帽尺寸 Nut Size										动额定负荷 Ca	静额定负荷 Coa
				D	A	E	B	L	W	H	X	Q	n		
SFYR1616-3.6	16	16	2.778	32	53	10.1	10	45	42	34	4.5	M6	1.8×2	1073	2551
SFYR2020-3.6	20	20	3.175	39	62	13	10	52	50	41	5.5	M6	1.8×2	1387	3515
SFYR2040-1.6	20	40	3.175	39	62	13	10	48	50	41	5.5	M6	0.8×2	653	1597
SFYR2550-1.6	25	50	3.969	47	74	15	12	58	60	49	6.6	M6	0.8×2	976	2495
SFYR2525-3.6	25	25	3.969	47	74	15	12	64	60	49	6.6	M6	1.8×2	2074	5494
SFYR3232-3.6	32	32	4.762	58	92	17	12	78	74	60	9	M6	1.8×2	3021	8690
SFYR4040-3.6	40	40	6.35	73	114	19.5	15	99	93	75	11	M6	1.8×2	4831	14062
SFYR5050-3.6	50	50	7.938	90	135	21.5	20	117	112	92	14	M6	1.8×2	7220	21974

BALL SCREW SUPPORT UNIT

Feature of Support Unit

Ball and lead screw assemblies consist of three main components: the screw shaft, the ball nut, and the end support bearings. More than just an accessory, end support bearings have a significant influence on the rigidity, maximum speed and buckling load of screw assemblies. The support unit for ball screws is used as fixed end support bearings for ball screw. They are designed to take the axial and radial load. These end support ball bearings are designed so that the bearing stiffness is greater than conventional bearings, which allows the machine structure to hold accurate position under heavy load.

The end supports are sometimes referred to as ”pillow block” style. Mounting holes are provided to bolt these to the base where your ball screw will operate.

- The BK,EK,FK fixed–side support unit contains two angular contact bearings that provide both axial and rotational support for the ball screw.
- The BF,EF,FF supported–side support unit has only a standard ball bearing that provides rotational support on the end of the ball screw opposite of where the drive occurs (typically a motor or pulley).
- Our standard ball screws are supplied with machining that will work with these supports without modification.



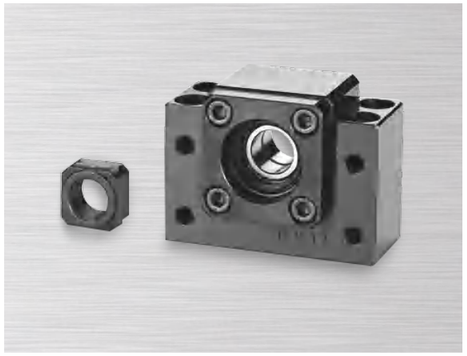

BK 固定端
BK Fixed End

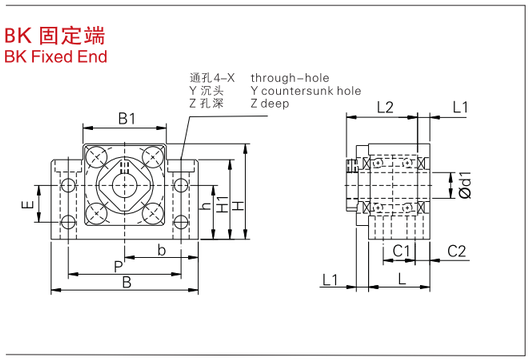

型号 Model	d1	L	L1	L2	L3	C1	C2	B	H	b±0.02	h±0.02	B1	H1	E	P	d2	X	Y	Z
BK 10	10	25	5	29	5	13	6	60	39	30	22	34	32.5	15	46	5.5	6.6	10.8	5
BK 12	12	25	5	29	5	13	6	60	43	30	25	34	32.5	18	46	5.5	6.6	10.8	5
BK 15	15	27	6	32	6	15	6	70	48	35	28	40	38	18	54	5.5	6.6	11	6.5
BK 17	17	35	9	44	7	19	8	86	64	43	39	50	55	28	68	6.6	9	14	8.5
BK 20	20	35	8	43	8	19	8	88	60	44	34	52	50	22	70	6.6	9	14	8.5
BK 25	25	42	12	54	9	22	10	108	80	53	48	64	70	33	85	9	11	17.5	11
BK 30	30	45	14	61	9	23	11	128	89	64	51	76	78	33	102	11	14	20	13
BK 35	35	50	14	67	12	26	12	140	96	70	52	88	79	35	114	11	14	20	13
BK 40	40	61	18	76	15	33	14	160	110	80	60	100	90	37	130	14	18	26	17.5

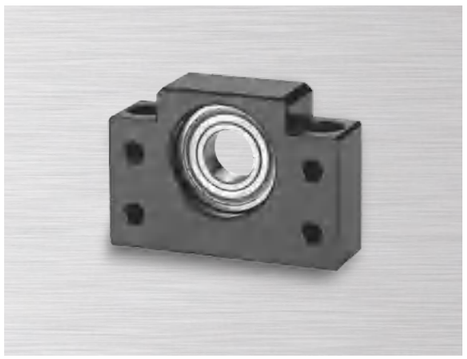

BF 支撑端
BF Support End

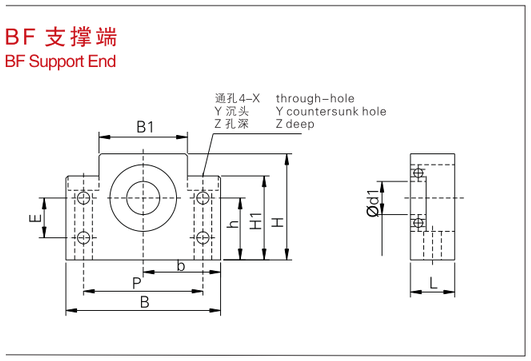

型号 Model	d1	L	B	H	b±0.02	h±0.02	B1	H1	E	P	d2	X	Y	Z
BF 10	8	20	60	39	30	22	34	32.5	15	46	5.5	6.6	10.8	5
BF 12	10	20	60	43	30	25	34	32.5	18	46	5.5	6.6	10.8	5
BF 15	15	20	70	48	35	28	40	38	18	54	5.5	6.6	11	6.5
BF 17	17	23	86	64	43	39	50	55	28	68	6.6	9	14	8.5
BF 20	20	26	88	60	44	34	52	50	22	70	6.6	9	14	8.5
BF 25	25	30	106	80	53	48	64	70	33	85	9	11	17.5	11
BF 30	30	32	128	89	64	51	76	78	33	102	11	14	20	13
BF 35	35	32	140	96	70	52	88	79	35	114	11	14	20	13
BF 40	40	37	160	110	80	60	100	90	37	130	14	18	26	17.5



EK 固定端
EK Fixed End

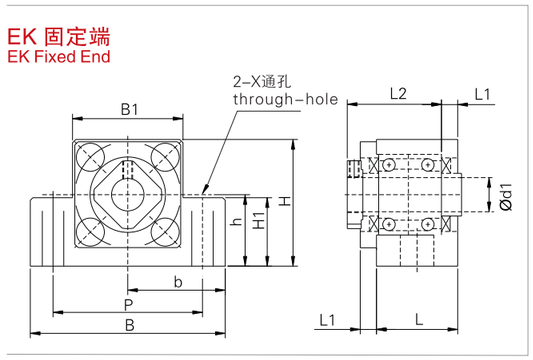

型号 Model	d1	L	L1	L2	L3	B	H	b±0.02	h±0.02	B1	H1	P	X
EK 10	10	24	6	29.5	6	70	43	35	25	36	24	52	9
EK 12	12	24	6	29.5	6	70	43	35	25	36	24	52	9
EK 15	15	25	6	35	5	80	49	40	30	41	25	60	11
EK 20	20	42	10	50	10	95	58	47.5	30	56	25	75	11

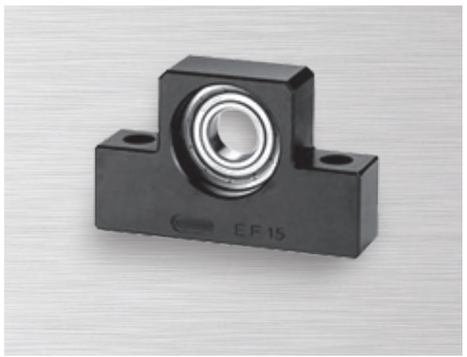

EF 支撑端
EF Support End

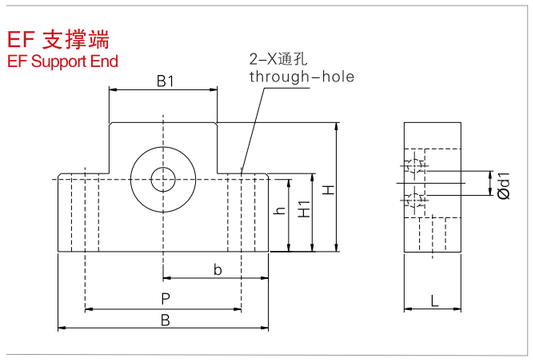

型号 Model	d1	L	B	H	b±0.02	h±0.02	B1	H1	P	X	Y	Z
EF 10	8	20	70	43	35	25	36	24	52	9	—	—
EF 12	10	20	70	43	35	25	36	24	52	9	—	—
EF 15	15	20	80	49	40	30	41	25	60	9	—	—
EF 20	20	26	95	58	47.5	30	56	25	75	11	—	—

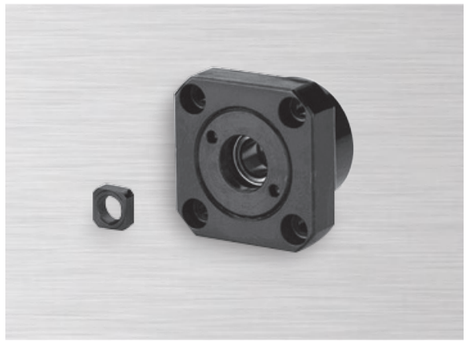

FK 固定端
FK Fixed End

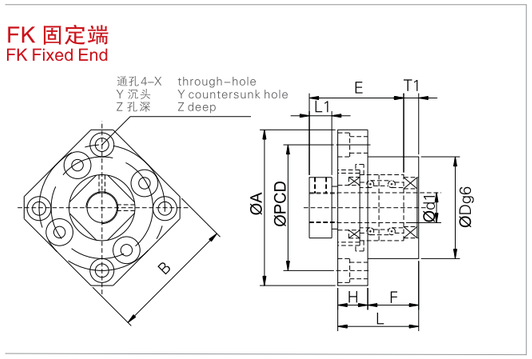

Model	d1	L	H	F	E	Dg6	A	PCD	B	L1	T1	X	Y	Z
FK 10	10	27	10	17	29.5	34	52	42	42	7.5	5	4.5	8	4
FK 12	12	27	10	17	29.5	36	54	44	44	7.5	5	4.5	8	4
FK 15	15	32	15	17	36	40	63	50	52	10	6	5.5	9.5	6
FK 20	20	52	22	30	50	57	85	70	68	8	10	6.6	11	10
FK 25	25	57	27	30	60	63	98	80	79	13	10	9	15	13
FK 30	30	62	30	32	61	75	117	95	93	11	12	11	17.5	15



FF 支撑端
FF Support End

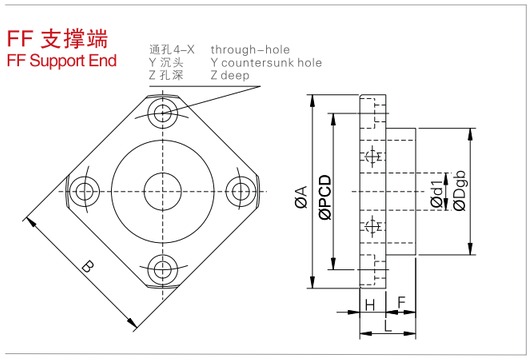

Model	d1	L	H	F	Dg6	A	PCD	B	X	Y	Z
FF 10	8	12	7	5	28	43	35	35	3.4	6.5	4
FF 12	10	15	7	8	34	52	42	42	4.5	8	4
FF 15	15	17	9	8	40	63	50	52	5.5	9.5	5.5
FF 20	20	20	11	9	57	85	70	68	6.6	11	6.5
FF 25	25	24	14	10	63	98	80	79	9	14	8.5
FF 30	30	27	18	9	75	117	95	93	11	17.5	11

Recommended Shaft End Machining Size (Fixed End)-BK. EK.FK

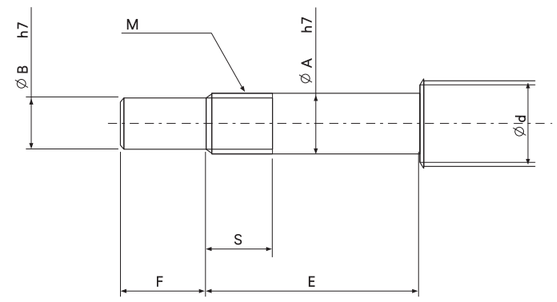

End machining

1. We can make end machining or without end machining ball screw.
2. For end machining ball screw, if you have special requirement, please show us the drawing.
3. Moreover, we also make the components of ball screw, such as ball screw nut housing, ball screw end support, couplings, etc.

Unit：mm

型　号 Support unit model No.	滚珠丝杠轴外径 Ball screw shaft OD	轴端部外径 Shaft support portion OD				公称螺纹 Metric screw thread	
BK型(TYPE BK)	D	A	B	E	F	M	S
BK 10	12/14/15	10	8	36	15	M10X1	16
BK 12	14/15/16	12	10	36	15	M12X1	14
BK 15	18/20	15	12	40	20	M15X1	12
BK 17	20/25	17	15	53	23	M17X1	17
BK 20	25/28	20	17	53	25	M20X1	15
BK 25	32/36	25	20	65	30	M25X1.5	18
BK 30	36/40	30	25	72	38	M30X1.5	25
BK 35	45	35	30	81	45	M35X1.5	28
BK 40	50	40	35	93	50	M40X1.5	35

Unit：mm

型　号 Support unit model No.		滚珠丝杠轴外径 Ball screw shaft OD	轴端部外径 Shaft support portion OD				公称螺纹 Metric screw thread	
FK型(TYPE FK)	EK型(TYPE EK)	D	A	B	E	F	M	S
FK 6	EK 6	8	6	4	28	8	M6X0.75	8
FK 8	EK 8	10/12	8	6	32	9	M8X1	10
FK 10	EK 10	12/14/15	10	8	36	15	M10X1	11
FK 12	EK 12	14/15/16	12	10	36	15	M12X1	11
FK 15	EK 15	18/20	15	12	47	20	M15X1	13
FK 20	EK 20	25/38/30	20	17	62	25	M20X1	17
FK 25	-	30/32/36	25	20	76	30	M25X1.5	20
FK 30	-	36/40	30	25	72	38	M30X1.5	25

Recommended Shaft End Machining Size (Support End)–BF.EF.FF)

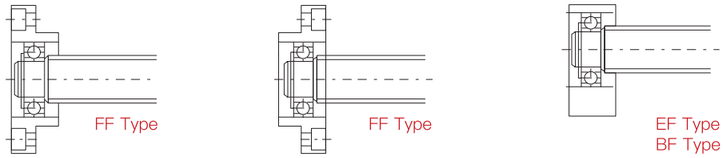

Unit：mm

Support unit model No.			Ball screw shaft OD	Shaft support portion OD
FF Type	EF Type	BF Type	d	A
FF 10	EF 10	BF 10	12/14/15	8
FF 12	EF 12	BF 12	14/15/16	10
FF 15	EF 15	BF 15	18/20	15
FF 17	-	BF 17	20/25	17
FF 20	EF 20	(BF 20)注NOTE	25/28/30	20
FF 25	-	BF 25	30/32/36	25
FF 30	-	BF 30	36/40	30
-	-	BF 35	40/45	35
-	-	BF 40	50	40

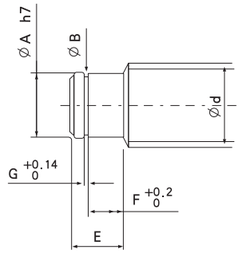

（注）
尺寸表中的（　　）尺寸表示BF20的尺寸。它与FF20及EF20的尺寸不同因此订货时请务必告知所使用的支撑单元型号。

Note：
In this table,dimensions in parentheses are those of type BF20.These dimensions differ from those of type FF20 and EF20.When placing an order,always specify the model number of the Support Unit to be used.

Unit：mm

Snap-ring Groove			
E	B	F	G
10	7.6	7	0.9
11	9.6	8	1.15
13	14.3	9	1.15
16	16.2	12	1.15
19(16)	19	14(12)	1.35
20	23.9	15	1.35
21	28.6	16	1.75
22	33	17	1.75
23	38	18	1.75

Rack and Pinion

Rack and Pinion Definition

A circular gear called “Pinion”,and the engaged teeth on a linear gear bar called “Rack”. Rotational motion applied to the pinion causes the rack to move. Thereby,translating the rotational motion of the pinion into the linear motion of the rack.

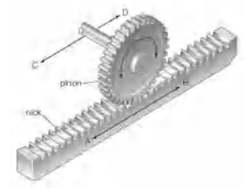

Rack and pinion gear types

Straight teeth has the tooth axis parallel to the axis of rotation.Straight teeth that run parallel to the axis of the gear. Load movement or transfer is manual or walk-behind.



Helical teeth gear provide continuous engagement along the tooth length and are often quieter and more efficient than straight tooth gear.Helical tooth gears resemble spur gears in the plane of rotation, but include teeth that are twisted along a helical path in the axial direction.



Application of Rack and Pinion

Woodworking machine; CNC router; High-speed metal cutting machine; Pick and place robot; Assembly machine; Material handling machine; Packaging machine; Automation; Gantry; Machine tool; Lift Mechanisms; X-Y Axis Table; Guide mechanism; Seventh-Axis robotic slide.

Advantage of Rack and Pinion

- High stabilization
- High Load capability
- More compact,but less complex
- Flexible for custom-made request
- Constant stiffness over the complete travel length plus good system performance

Material	Tooth Shape	Tooth Process	Heat Treatment	Module	Length	Surface Treatment
S=S45C	S=Spur rack	G=Grinding	H=Heat treatment	M2/M3/M4	05=500mm	G=Grinding
R=SCM440	H=Helical rack	F=Finish cutting	Q=Quenched		10=1000mm	B=Sandblasting

Straight Rack Specification



SSGH Specification

精度等级 Precision grade	DIN 6 H 25	齿面硬度 Tooth Hardness	50-55HRC
齿型 Gear tooth	直齿 Straight	表面处理 Surface treatment	研 磨 Grinding
压力角 Pressure angle	20°	齿面处理 Treatment of tooth	研 磨 Grinding
材质 Material	S45C	熟处理 Heat treatment	齿面高週波热处理 Tooth surface induction hardened

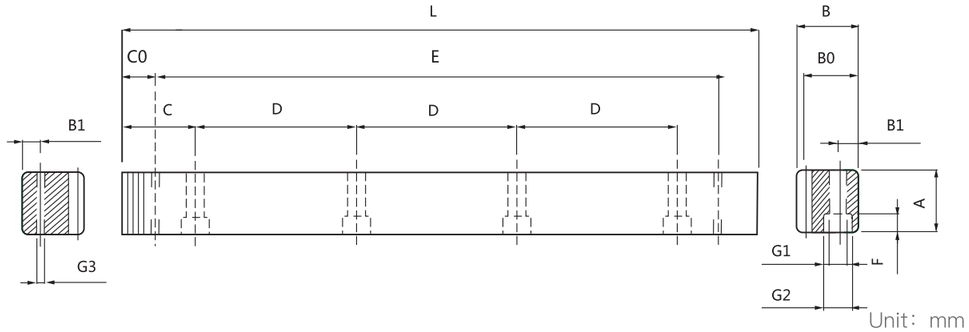

Unit：mm

产品型号 Model	L	齿数 Tooth No.	A	B	B0	C	D	孔数 Hole No.	B1	G1	G2	F	C0	E	G3	总齿距误差 Pitch Error /300mm
SSGH015-050	499.51	106	17	17	15.5	62.44	124.88	4	8	6	9.5	7	29.0	441.5	5.7	0.021
SSGH015-100	999.03	212	17	17	15.5	62-44	124.88	8	8	6	9.5	7	29.0	941.0	5.7	0.021
SSGH020-050	502.64	80	24	24	22	62.83	125.66	4	8	7	11	7	31.3	440.1	5.7	0.022
SSGH020-100	1005.28	160	24	24	22	62.83	126.66	8	8	7	11	7	31.3	942.7	5.7	0.022
SSGH030-050	508.95	54	29	29	26	63.62	127.23	4	9	10	15	9	34.4	440.1	7.7	0.024
SSGH030-100	1017.9	108	29	29	26	63.62	127.23	8	9	10	15	9	34.4	949.1	7.7	0.024
SSGH040-050	502.64	40	39	39	35	62.83	125.66	4	12	10	15	9	37.5	427.7	7.7	0.025
SSGH040-100	1005.28	80	39	39	35	62.83	125.66	8	12	10	15	9	37.5	930.3	7.7	0.025
SSGH050-050	502.65	32	49	39	34	62.83	125.66	4	12	14	20	13	30.1	442 4	11.7	0.025
SSGH050-100	1005.31	64	49	39	34	62.83	125.66	8	12	14	20	13	30.1	945	11.7	0.025
SSGH060-050	508.95	27	59	49	43	63.62	127.23	4	16	18	26	17	31.4	446.1	15.7	0.026
SSGH060-100	1017.9	54	59	49	43	63.62	127.23	8	16	18	26	17	31.4	955.0	15.7	0.026
SSGH080-050	502.64	20	79	79	71	62.83	125.66	4	25	22	33	21	26.6	449.5	19.7	0.027
SSGH080-100	1005.28	40	79	79	71	62.83	125.66	8	25	22	33	21	26.6	952	19.7	0.027

Straight Rack Specification



SSFQ-G Specification

精度等级 Precision grade	DIN 7 E 25	齿面硬度 Tooth Hardness	15-20HRC
齿型 Gear tooth	直齿 Straight	表面处理 Surface treatment	研 磨 Grinding
压力角 Pressure angle	20°	齿面处理 Treatment of tooth	精切削 Finish cutting
材质 Material	S45C	熟处理 Heat treatment	调质热处理 Quenched

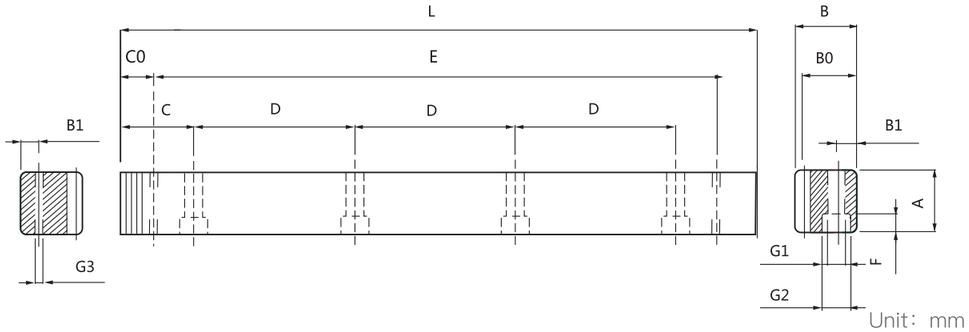

Unit：mm

产品型号 Model	L	齿数 Tooth No.	A	B	B0	C	D	孔数 Hole No.	B1	G1	G2	F	C0	E	G3	总齿距误差 Pitch Error /300mm
SSFQ-G015-050	499 51	106	17	17	15.5	62 44	124.88	4	8	6	9.5	7	29.0	441 5	5.7	0.042
SSFQ-G015-100	999.03	212	17	17	15.5	62.44	124.88	8	8	6	9.5	7	29.0	941 0	5.7	0.042
SSFQ-G020-050	50264	80	25	24	22	62.83	125.66	4	8	7	11	7	31.3	440 1	5.7	0.044
SSFQ-G020-100	1005.28	160	25	24	22	62.83	125.66	8	8	7	11	7	31.3	942.7	5.7	0.044
SSFQ-G030-050	50895	54	30	29	26	63.62	127.23	4	9	10	15	9	34 4	440 1	7.7	0.046
SSFQ-G030-100	1017.9	108	30	29	26	63.62	127.23	8	9	10	15	9	34.4	949.1	7.7	0.046
SSFQ-G040-050	502.64	40	40	39	35	62.83	125.66	4	12	10	15	9	37.5	427.7	7.7	0.048
SSFQ-G040-100	1005.28	80	40	39	35	62.83	125.66	8	12	10	15	9	37.5	930.3	7.7	0.048
SSFQ-G050-050	50265	32	49	39	34	62.83	125.66	4	12	14	20	13	30.1	442.4	11.7	0.050
SSFQ-G050-100	1005.31	64	49	39	34	62.83	125.66	8	12	14	20	13	30.1	945	11.7	0.050
SSFQ-G060-050	50895	27	59	49	43	63.62	127.23	4	16	18	26	17	31 4	446.1	15.7	0.055
SSFQ-G060-100	1017.9	54	59	49	43	63.62	127.23	8	16	18	26	17	31.4	955.0	15.7	0.055
SSFQ-G080-050	502.64	20	79	79	71	62.83	125.66	4	25	22	33	21	26.6	449 5	19.7	0.060
SSFQ-G080-100	1005.28	40	79	79	71	62.83	125.66	8	25	22	33	21	26.6	952	19.7	0.060

Straight Rack Specification

SSFH-G Specification



精度等级 Precision grade	DIN 7 E 25	齿面硬度 Tooth Hardness	50-55HRC
齿型 Gear tooth	直齿 Straight	表面处理 Surface treatment	研 磨 Grinding
压力角 Pressure angle	20°	齿面处理 Treatment of tooth	精切削 Finish cutting
材质 Material	S45C	熟处理 Heat treatment	齿面高週波热处理 Tooth surface induction hardened

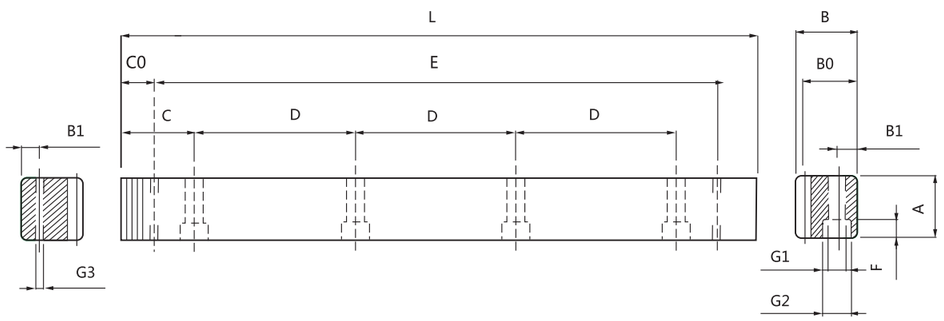

Unit：mm

Model	L	Tooth NO.	A	B	BO	C	D	Hole NO.	B1	G1	G2	F	CO	E	G3	Pitch Error /300mm
SSFH-G015-050	499.51	106	17	17	15.5	62.44	124.88	4	8	6	9.5	7	29.0	441.5	5.7	0.058
SSFH-G015-100	999.03	212	17	17	15.5	62-44	124.88	8	8	6	9.5	7	29.0	941.0	5.7	0.058
SSFH-G020-050	502.64	80	24	24	22	62.83	125.66	4	8	7	11	7	31.3	440.1	5.7	0.059
SSFH-G020-100	1005.28	160	24	24	22	62.83	126.66	8	8	7	11	7	31.3	942.7	5.7	0.061
SSFH-G030-050	508.95	54	29	29	26	63.62	127.23	4	9	10	15	9	34.4	440.1	7.7	0.065
SSFH-G030-100	1017.9	108	29	29	26	63.62	127.23	8	9	10	15	9	34.4	949.1	7.7	0.065
SSFH-G040-050	502.64	40	39	39	35	62.83	125.66	4	12	10	15	9	37.5	427.7	7.7	0.068
SSFH-G040-100	1005.28	80	39	39	35	62.83	125.66	8	12	10	15	9	37.5	930.3	7.7	0.068
SSFH-G050-050	502.65	32	49	39	34	62.83	125.66	4	12	14	20	13	30.1	442 4	11.7	0.070
SSFH-G050-100	1005.31	64	49	39	34	62.83	125.66	8	12	14	20	13	30.1	945	11.7	0.070
SSFH-G060-050	508.95	27	59	49	43	63.62	127.23	4	16	18	26	17	31.4	446.1	15.7	0.072
SSFH-G060-100	1017.9	54	59	49	43	63.62	127.23	8	16	18	26	17	31.4	955.0	15.7	0.072
SSFH-G080-050	502.64	20	79	79	71	62.83	125.66	4	25	22	33	21	26.6	449.5	19.7	0.075
SSFH-G080-100	1005.28	40	79	79	71	62.83	125.66	8	25	22	33	21	26.6	952	19.7	0.075

Straight Rack Specification

RSGH-D Specification



精度等级 Precision grade	DIN 6 H 25	齿面硬度 Tooth Hardness	50-55HRC
齿型 Gear tooth	直齿 Straight	表面处理 Surface treatment	研 磨 Grinding
压力角 Pressure angle	20°	齿面处理 Treatment of tooth	研 磨 Grinding
材质 Material	SCM440	熟处理 Heat treatment	齿面高週波热处理 Tooth surface induction hardened

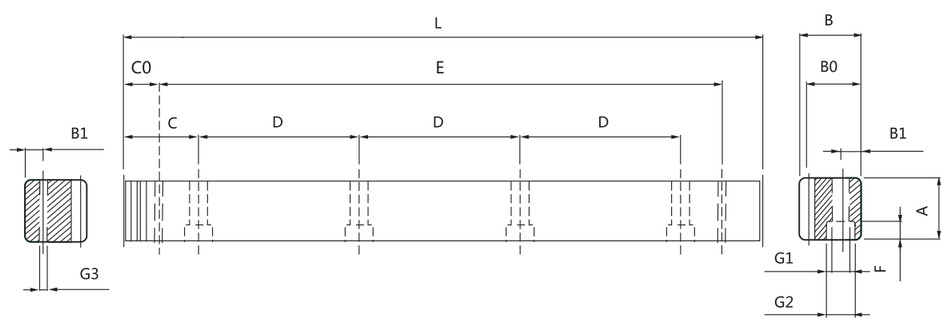

Unit：mm

Model	L	Tooth NO.	A	B	BO	C	D	Hole NO.	B1	G1	G2	F	CO	E	G3	Pitch Error /300mm
RSGH-D015-050	499.51	106	17	17	15.5	62.44	124.88	4	8	6	9.5	7	29.0	441.5	5.7	0.020
RSGH-D015-100	999.03	212	17	17	15.5	62-44	124.88	8	8	6	9.5	7	29.0	941.0	5.7	0.025
RSGH-D020-050	502.64	80	24	24	22	62.83	125.66	4	8	7	11	7	31.3	440.1	5.7	0.020
RSGH-D020-100	1005.28	160	24	24	22	62.83	126.66	8	8	7	11	7	31.3	942.7	5.7	0.025
RSGH-D030-050	508.95	54	29	29	26	63.62	127.23	4	9	10	15	9	34.4	440.1	7.7	0.022
RSGH-D030-100	1017.9	108	29	29	26	63.62	127.23	8	9	10	15	9	34.4	949.1	7.7	0.025
RSGH-D040-050	502.64	40	39	39	35	62.83	125.66	4	12	10	15	9	37.5	427.7	7.7	0.025
RSGH-D040-100	1005.28	80	39	39	35	62.83	125.66	8	12	10	15	9	37.5	930.3	7.7	0.025
RSGH-D050-050	502.65	32	49	39	34	62.83	125.66	4	12	14	20	13	30.1	442 4	11.7	0.025
RSGH-D050-100	1005.31	64	49	39	34	62.83	125.66	8	12	14	20	13	30.1	945	11.7	0.028
RSGH-D060-050	508.95	27	59	49	43	63.62	127.23	4	16	18	26	17	31.4	446.1	15.7	0.025
RSGH-D060-100	1017.9	54	59	49	43	63.62	127.23	8	16	18	26	17	31.4	955.0	15.7	0.028
RSGH-D080-050	502.64	20	79	79	71	62.83	125.66	4	25	22	33	21	26.6	449.5	19.7	0.030
RSGH-D080-100	1005.28	40	79	79	71	62.83	125.66	8	25	22	33	21	26.6	952	19.7	0.033

Helical Rack Specification



SHFQ Specification

精度等级 Precision grade	DIN 7 E 25	齿面硬度 Tooth Hardness	15-20HRC
齿型 Gear tooth	斜齿 Helical	表面处理 Surface treatment	研 磨 Grinding
压力角 Pressure angle	20°	齿面处理 Treatment of tooth	精切削 Finish cutting
材质 Material	S45C	熟处理 Heat treatment	调质热处理 Quenched
材质 Material	19° 31′ 42″		

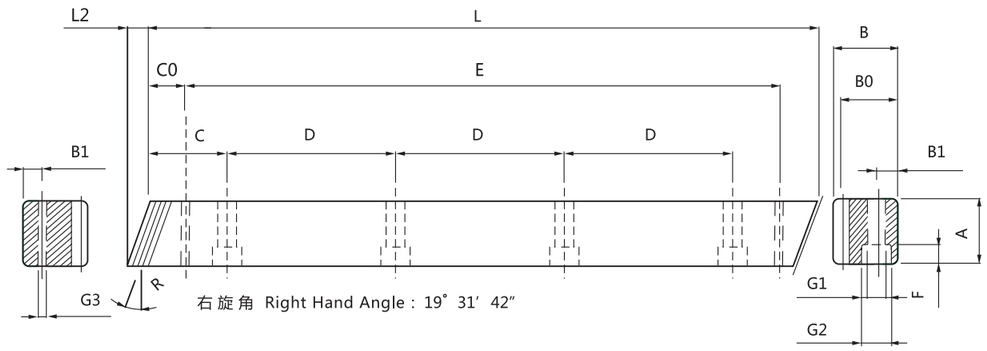

Unit：mm

产品型号 Model	L	L2	齿数 Tooth No.	A	B	B0	C	D	孔数 Hole No.	B1	G1	G2	F	C0	E	G3	总齿距误差 Pitch Error /300mm
SHFQ015-050	500 00	6	100	17	17	15.5	62.50	125	4	8	6	9.5	7	31.7	436.6	5.7	0.042
SHFQ015-100	1000.0	6	200	17	17	15.5	62.50	125	8	8	6	9.5	7	31.7	936.6	5.7	0.042
SHFQ020-050	500.00	8.9	75	25	24	22	62.50	125	4	8	7	11	7	31.7	436.6	5.7	0.044
SHFQ020-100	1000.0	8.9	150	25	24	22	62.50	125	8	8	7	11	7	31.7	936.6	5.7	0.044
SHFQ030-050	500.00	10.6	50	30	29	26	62 50	125	4	9	10	15	9	35.0	430.0	7.7	0.046
SHFQ030-100	1000.0	10.6	100	30	29	26	62.50	125	8	9	10	15	9	35.0	930.0	7.7	0.046
SHFQ040-050	506 67	14.2	38	40	39	35	62.50	125	4	12	10	15	9	33.3	433.0	7.7	0.048
SHFQ040-100	1000.0	14.2	75	40	39	35	62.50	125	8	12	10	15	9	33.3	933.4	7.7	0.048
SHFQ050-050	500.00	17.7	30	50	39	34	62.50	125	4	12	14	20	13	37.5	425.0	11.7	0.050
SHFQ050-100	1000.0	17.7	60	50	39	34	62.50	125	8	12	14	20	13	37.5	925.0	11.7	0.050
SHFQ060-050	500.00	20.9	25	59	49	43	62.50	125	4	16	18	26	17	37.5	425.0	15.7	0.055
SHFQ060-100	1000.0	20.9	50	59	49	43	62.50	125	8	16	18	26	17	37.5	925.0	15.7	0.055
SHFQ080-050	48000	28.0	18	79	79	71	60.00	120	4	25	22	33	21	120.0	240.0	17.7	0060
SHFQ080-100	960.00	28.0	36	79	79	71	60.00	120	8	25	22	33	21	120.0	720.0	17.7	0060

Helical Rack Specification



SHFH–G Specification

精度等级 Precision grade	DIN 7 E 25	齿面硬度 Tooth Hardness	15-55HRC
齿型 Gear tooth	斜齿 Helical	表面处理 Surface treatment	研 磨 Grinding
压力角 Pressure angle	20°	齿面处理 Treatment of tooth	精切削 Finish cutting
材质 Material	S45C	熟处理 Heat treatment	齿面高週波热处理 tooth surface induction hardened
右旋角 Right Hand Angle	19° 31′ 42″		

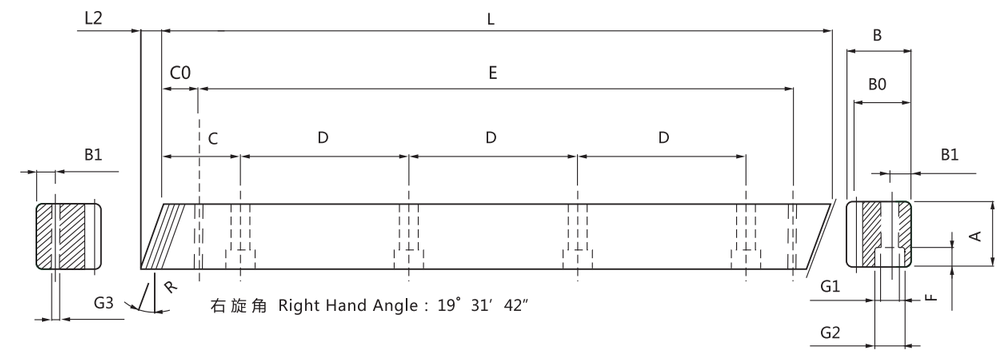

Unit：mm

产品型号 Model	L	L2	齿数 Tooth No.	A	B	B0	C	D	孔数 Hole No.	B1	G1	G2	F	C0	E	G3	总齿距误差 Pitch Error /300mm
SHFH-G015-050	500 00	6	100	17	17	15.5	62.50	125	4	8	6	9.5	7	31.7	436.6	5.7	0.059
SHFH-G015-100	1000.0	6	200	17	17	15.5	62.50	125	8	8	6	9.5	7	31.7	936.6	5.7	0.059
SHFH-G020-050	500.00	9.2	75	24	24	22	62.50	125	4	8	7	11	7	31.7	436.6	5.7	0.061
SHFH-G020-100	1000.0	9.2	150	24	24	22	62.50	125	8	8	7	11	7	31.7	936.6	5.7	0.061
SHFH-G030-050	500.00	11.0	50	29	29	26	62.50	125	4	9	10	15	9	35.0	430.0	7.7	0.065
SHFH-G030-100	1000.0	11.0	100	29	29	26	62.50	125	8	9	10	15	9	35.0	930.0	7.7	0.065
SHFH-G040-050	506.67	14.5	38	39	39	35	62.50	125	4	12	10	15	9	33.3	433.0	7.7	0.068
SHFH-G040-100	1000.0	14.5	75	39	39	35	62.50	125	8	12	10	15	9	33.3	933.4	7.7	0.068
SHFH-G050-050	500.00	17.7	30	49	39	34	62.50	125	4	12	14	20	13	37.5	425.0	11.7	0.070
SHFH-G050-100	1000.0	17.7	60	49	39	34	62.50	125	8	12	14	20	13	37.5	925.0	11.7	0.070
SHFH-G060-050	500.00	21.3	25	59	49	43	62.50	125	4	16	18	26	17	37.5	425.0	15.7	0.072
SHFH-G060-100	1000.0	21.3	50	59	49	43	62.50	125	8	16	18	26	17	37.5	925.0	15.7	0.072
SHFH-G080-050	48000	28.7	18	79	79	71	60.00	120	4	25	22	33	21	120.0	240.0	17.7	0.075
SHFH-G080-100	960.00	28.7	36	79	79	71	60.00	120	8	25	22	33	21	120.0	720.0	17.7	0.075